Qingdao Mingrun
Machinery Co. Ltd.

PRODUCT CATALOG

- Lashing chains, tensioners & speed lashes
- D-rings & stopper plates
- Shackles & turnbuckles
- Bins & tarpaulins

Chain production

Chain testing

Chain painting

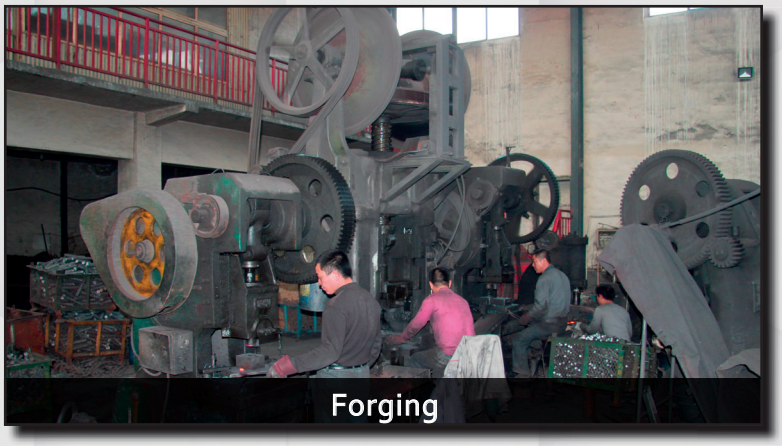

Forging

CONTENT

Introduction Stuut Lifting & Lashing 4
Introduction Qingdao Mingrun Machinery Co. Ltd. 5
Introduction Qingdao R.S. Marine Services Co. Ltd. 6
HMPE ropes & shackles 8
Long link lashing chains 10
Elephant feet 13
C-hooks 14
Eye hooks 15
Short link lashing chains 17
Tension levers 19
Extension lever 21
Speed lashings 22
D-rings 28
Lashing bar 34
Stopper plates 35
Bow shackles 36
Lashing D-shackle 39
Turnbuckles 40
Wire ropes 51
Wire rope clips 54
Bins 55
Buckles 64
Tarpaulins 71
Welded blanket 73
Dunnage wood 74
Demo test certificate 75

Stuut Lifting & Lashing

...the best link between you and the manufacturer

INTRODUCTION STUUT LIFTING & LASHING

Stuut Lifting & Lashing represents as agent various manufacturers of lifting and lashing equipment. In this catalogue we introduce Qingdao Mingrun Machinery Co. Ltd., manufacturer of lashing chains, tensioners, D-Rings, shackles, turnbuckles and stopper plates.

Together with our manufacturers, we offer high quality products with an excellent price-performance ratio. Our extensive experience in this sector means we can provide expert market knowledge and a tailor-made service to suit your needs.

As exclusive agent, we coordinate and facilitate all commercial activities on behalf of the factories. We will assist you throughout the entire process of request for quotations, orders and deliveries. We are not a trading company; the customers we serve buy directly from the manufacturer and we assist at every step. In this way, we are able to offer high quality products with very competitive prices.

our experience - our connections - your advantages

- Competitive pricing - As a customer you buy directly from the manufacturer and not from a trading company. In this way you get the best price-performance ratio in the market.
- Great support - We will assist you throughout the entire process of requests for quotations, orders and deliveries.
- Continuous high quality - All items are produced by our factories themselves under strict internal quality control.
- Competent consulting - Excellent market knowledge and advice are based on a very good understanding of your needs. We facilitate all the communication with the manufacturers and monitor all orders for you.

Please do not hesitate to contact us for further information about our manufacturers, their products or about the services we offer. It is our pleasure to discuss with you the various possibilities of cooperation.

Phone: +49 5228 9628290
E mail: sales@lifting-lashing.de
Web: www.marine-lashing.com

Qingdao Mingrun
Machinery Co. Ltd.

INTRODUCTION QINGDAO MINGRUN MACHINERY CO. LTD.

Qingdao Mingrun Machinery Co. Ltd is a 2nd generation family owned and managed company located in Jimo, Qingdao. The company goes back to 2012 and specialises in chain making and forging.

The two production sites cover nearly 17,000 square meters. Qingdao Mingrun Machinery Co. Ltd. employs more than 60 production employees and has a team of twelve specialised technicians. In the sales department, the experienced staff serves national and international customers.

The factory has a forging and a chain making department and is mainly specialised in:

- Long link lashing chains
- C-Hooks, eye hooks & Elephant feet
- Round and square tension levers
- Speedlash (with different types of end fittings)
- D-Rings MBL 20T / 36(40)T / 50T / 67T
- Shackles
- Short link chains (EN & US standard)
- Turnbuckles
- Bins
- Stopper plates
- Buckles for one way lashing

SCI

QUALITY MANAGEMENT SYSTEM CERTIFICATION

This is to certify that

Qingdao City Yuedasite Rigging Co., Ltd.

Certificate No.:672Q23050524321
Organization code：91370282747240328T
Address:Xiaohan Village Industrial Park, Huanxiu Street Office, Jimo City.

After evaluation, it meets the requirements of the following standards

ISO 9001:2015 idt GB/T 19001-2016

Scope of certification

Production and sales of hardware rigging, chains, and forgings.
(The scope requiring qualification permission shall be operated with qualification)

The scope of this certificate shall be used together with the effective laws and regulations involved.The requirements include but are not limited to administrative license,qualification scope and CCC certification.Under the condition that the quality management system of the certificate holder continuously meets the requirements of the standard,the validity period of this certificate is three years.The validity of the certificate shall be confirmed by regular supervision and audit of SCI.This certificate is valid until **May.23,2024**. Please complete the supervision audit or recertification before this date. If you fail to pass the audit within the time limit, this certificate will be invalid.

Validity of registration: May.24,2023 To:May.23,2026

Issuer:

Qingdao Standard Certification Inspection Co., Ltd

Certificate query method:
1.National certification and accreditation information public service platform：http://cx.cnca.cn/
2.Company website：www.biaorenrenzheng.com
E-mail：biaorengroup@163.com

International customers are mostly located in Europe, North and South America, the Middle East, Japan and Korea.

The factory is ISO 9001:2015 certified and works according to the latest international standards.

More than 90% of the products are exported to overseas markets.

The focus is to offer good quality products made in China against competitive prices.

Qingdao R.S. Marine
Services Co. Ltd.

INTRODUCTION QINGDAO R.S. MARINE SERVICES CO. LTD.

Qingdao R.S. Marine Services Co. LTD was founded in 2023 and is a joint venture company associated with Qingdao Mingrun Machinery Co. Ltd.

Although we are a young company, our founding partners have a long history in producing rigging and lashing equipment, offering lashing services and global sales of lifting and lashing equipment.

We are committed to support our valued customers by providing economic, hassle-free and safe lifting & lashing solutions, covering all main China ports all year long, 7 days a week, 24 hours a day.

Activities, covering all main ports in China

- **Lashing Services:**
  We offer lashing services for Multi-purpose vessels, Heavy lift vessels, Timber vessels, Ro-Ro vessels and Container vessels. We can offer our lashing services and the supply of all required materials quickly in the main ports in China, either directly ourselves or together with a selected group of local partners.
- **Services to support our customers:**
  Inspection of lifting and lashing equipment, scrap metal disposal, scrap lifting & lashing equipment disposal.
- **Supply of lashing equipment:**
  For lashing your cargo, we use & offer a wide range of heavy duty lashing materials. Our materials include dunnage wood, long link lashing chains & tensioners, speed lashes, short link lashing chains & load binders, steel wire ropes, turnbuckles, shackles, ratchet tie downs, one-way webbing, car & truck lashings, rubber mats, D-rings, stopper plates, twist-locks, lashing bars, bridge fittings, wheel chokes, trailer horses, trailer jacks, dunnage air bags, bins & flat racks.
- **Supply of auxiliary equipment:**
  We offer a wide range of auxiliary equipment including grinding & cutting disks, welding blankets, aluminium tape, tools & equipment, ladders.
- **Supply of lifting equipment:**
  For lifting your cargo we offer a wide range of high quality lifting equipment including lifting beams, spreader beams, shackles, lifting chains, lifting points, polyester webbing slings, polyester round slings, HMPE round slings, grommets, wire rope slings, containers spreaders, truck lifting gear, truck lifting nets, manual chain hoists & lever hoists, snatch blocks, crane hooks & crane blocks.

HMPE lashing rope - 16 / 26 / 28 mm

Characteristics:

- Good abrasion resistance
- Low weight (7x lighter than steel)
- Good stability with respect to UV light
- Resistant to chemicals
- Easy handling
- Easy to splice and inspect
- Has the same strength wet or dry
- The length remains same under wet conditions
- It stores very little energy, therefore has little backlash if it breaks, improving safety

Material and performance:

- High quality UHMWPE fiber
- Specific gravity: 0.975
- Melting point: 150° C
- Water absorption: none
- UV resistance: high
- Abrasion resistance: high

Construction:

12- Strand

Specifications:

Rope Diameter	Eye Length	Weight	Ketx		MBL
mm	m	kg per meter	standard	deviation	kN
18	0.25	0.236	236	5 %	240
26	0.35	0.42	420		440
28	0.35	0.49	490		540

(Important note: Measures and weights without engagement. We reserve the right to change technical details.)

Stuut Lifting & Lashing - SLL Handelsvertretung e. K.
sales@marine-lashing.com
+49 5228 9628290

Version: 2024-02-05 M
© Copyright Stuut Lifting & Lashing. All rights reserved.

HMPE soft shackle

Product features:

- Low stretch
- Replacement for wire steel
- Maximum strength to weight ratio
- One piece construction - no pins to fasten
- Outstanding abrasion resistance
- Floats in water & muddy environments
- Can be fitted and removed with ease
- Light weight for gross weight reduction
- Great performance for all sorts of applications, can be used in boating, camping, personal watercraft, climbing, ATV & SUV off-road vehicle, object connection

Material and performance:

- High quality UHMWPE fiber - 12 strands
- Specific gravity: 0.975
- Melting point: 150° C
- Water absorption: none
- UV resistance: high
- Abrasion resistance: high

Colour Variety:

- It can be made in one colour or two mixed colours with different customized lengths.
- It can be made in different colours such as blue, grey, orange, black, red, yellow etc. as request.

Specification:

Diameter (mm)	14	16	22	28
Breakload (kg)	22,500	28,000	45,000	56,000
Min. length L1 (m)	0.7	0.75	0.8	1.5
Colours	assorted			

(Important note: Measures and weights without engagement. We reserve the right to change technical details.)

Stuut Lifting & Lashing - SLL Handelsvertretung e. K.
sales@marine-lashing.com
+49 5228 9628290

Version: 2024-02-27 Y
© Copyright Stuut Lifting & Lashing. All rights reserved.

Lashing chains

Long link lashing chains 9-11-13mm

100% manufacturing proof load tested

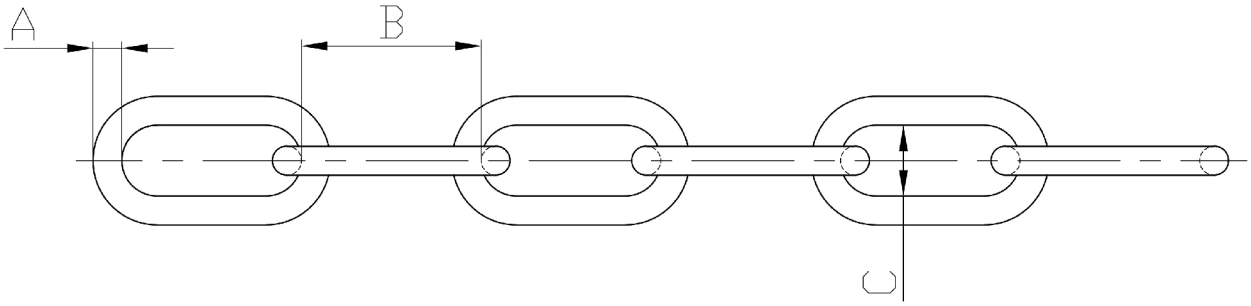

- Material : alloy steel
- Finish : painted, electro galvanized, electro galvanized + painted, hot dip galvanized
- Packing : as per customer request

Chain Ø mm	SWL kN / t painted	MBL kN / t painted	Weight kg / m	Dimensions (mm)		
				A	B	C
9	49 / 5	98 / 10	1.40	9	57	16
11	73.5 / 7.5	147 / 15	2.14	11	64	18
13	98 / 10	196 / 20	2.97	13	81	23

(Important note: Measures and weights without engagement. We reserve the right to change technical details.)

Stuut Lifting & Lashing - SLL Handelsvertretung e. K.
sales@marine-lashing.com
+49 5228 9628290

Version: 2024-03-13 Y
© Copyright Stuut Lifting & Lashing. All rights reserved.

Lashing chains

Long link lashing chains 9-11-13mm, assembled

100% manufacturing proof load tested

Lashing chain with C-hook | C-hook

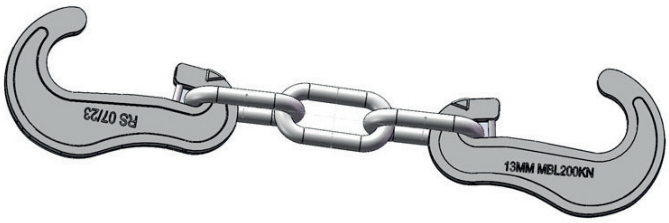

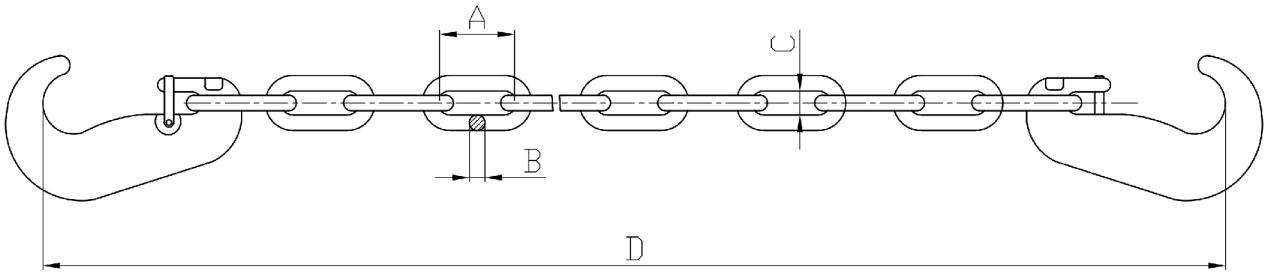

Lashing chain with C-hook | Elephant foot

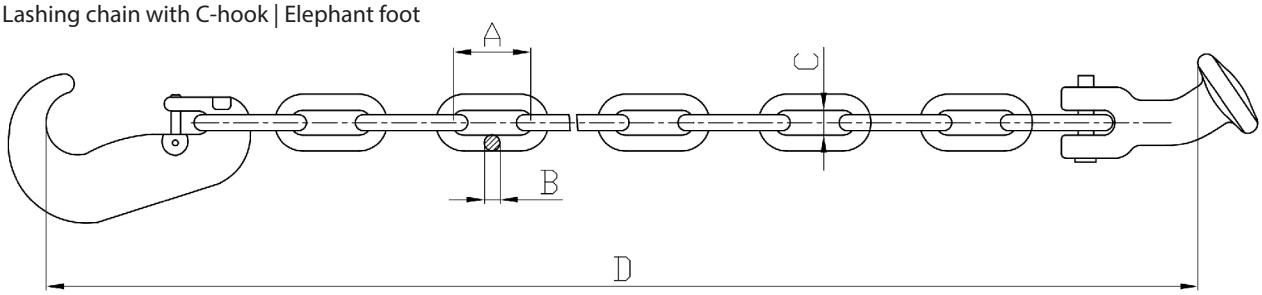

Other executions available on request.

- Material : alloy steel
- Finish : painted, electro galvanized, electro galvanized + painted, hot dip galvanized
- Packing : as per customer request

Chain Ø mm	SWL kN / t painted	MBL kN / t painted	Weight D = 6 meter*	Chain Weight kg / m	Dimensions (mm)		
					A	B	C
9	49 / 5	98 / 10	9.45	1.40	54	9	16
11	73.5 / 7.5	147 / 15	15.3	2.14	64	11	18
13	98 / 10	196 / 20	19.2	2.97	81	13	23
*for type C-hook / C-hook							

(Important note: Measures and weights without engagement. We reserve the right to change technical details.)

Stuut Lifting & Lashing - SLL Handelsvertretung e. K.
sales@marine-lashing.com
+49 5228 9628290

Version: 2024-03-13 Y
© Copyright Stuut Lifting & Lashing. All rights reserved.

Lashing chains

Long link lashing chains, assembled, fully welded

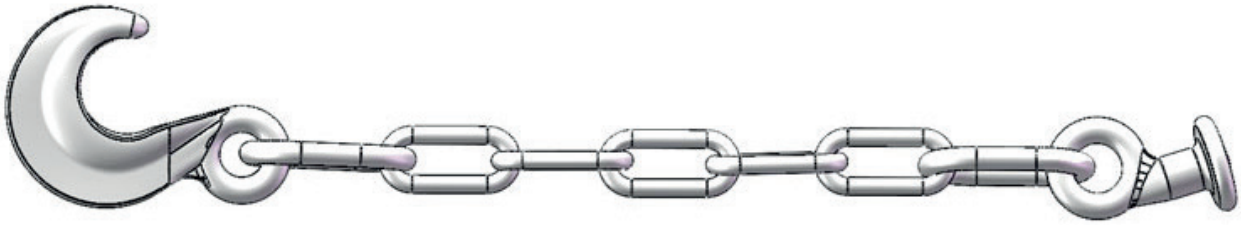

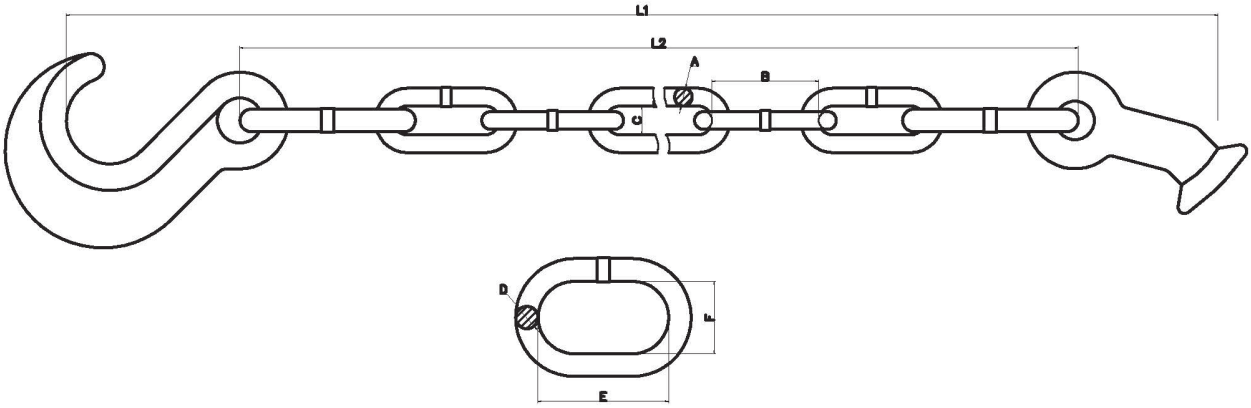

- Material : forged steel & high tensile steel
- Finish : painted
- Packing & markings : as per customer request

Chain Ø mm	SWL kN / t painted	MBL kN / t painted	Weight kg / pc	Chain Weight kg / m	Dimensions (mm)						Lengths (m)*	
					A	B	C	D	E	F	L1	L2
11	73.5/7.5	147/15	8.4	2.14	11	66	18	14	81	45	3	2.8
13	98/10	196/20	11	2.97	13	80	23	18	81	45	3	2.8
*Other lengths available on request.												

(Important note: Measures and weights without engagement. We reserve the right to change technical details.)

Stuut Lifting & Lashing - SLL Handelsvertretung e. K.
sales@marine-lashing.com
+49 5228 9628290

Version: 2024-03-13 Y
© Copyright Stuut Lifting & Lashing. All rights reserved.

Fittings for lashing chains

Clevis elephant foot / Eye elephant foot, MBL 200 kN

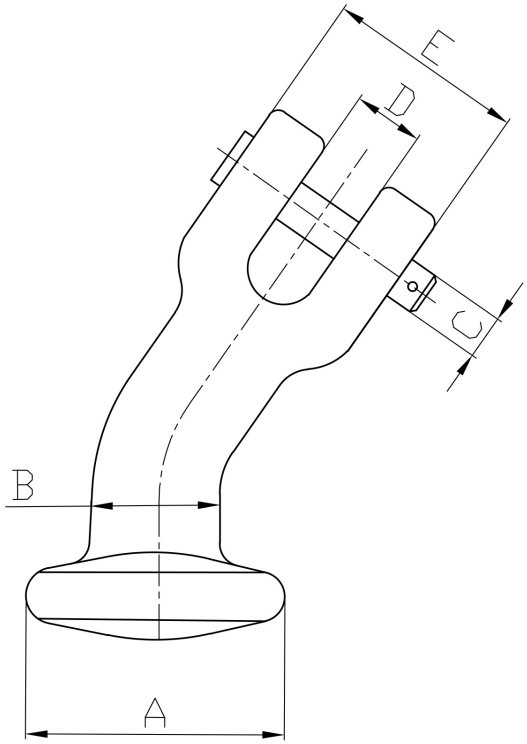

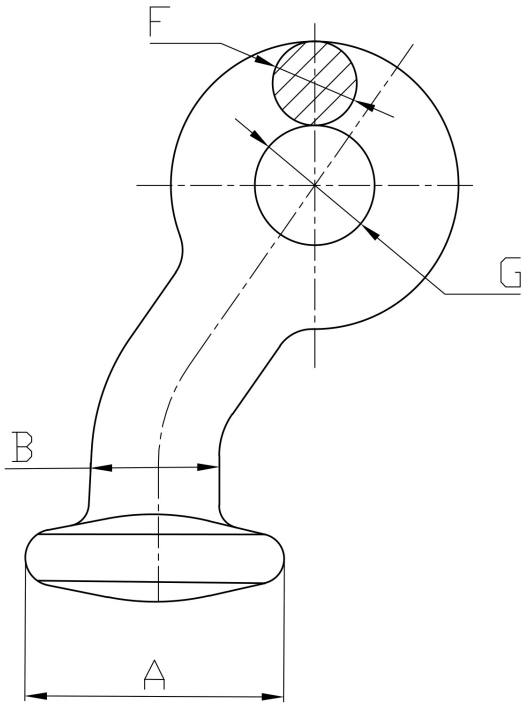

- Material : forged steel & high tensile steel
- Finish : painted or galvanized
- Packing & markings : as per customer request

Type	SWL kN / t painted	MBL kN / t painted	Weight kg	Dimensions (mm)						
				A	B	C	D	E	F	G
Clevis elephant foot	98 / 10	196 / 20	0.97	58	32	12.3	15	46	---	---
Eye elephant foot	98 / 10	196 / 20	0.85	58	32	---	---	---	18	24

(Important note: Measures and weights without engagement. We reserve the right to change technical details.)

Stuut Lifting & Lashing - SLL Handelsvertretung e. K.
sales@marine-lashing.com
+49 5228 9628290

Version: 2023-06-26 Y
© Copyright Stuut Lifting & Lashing. All rights reserved.

Fittings for lashing chains

C-hooks 9-11-13mm

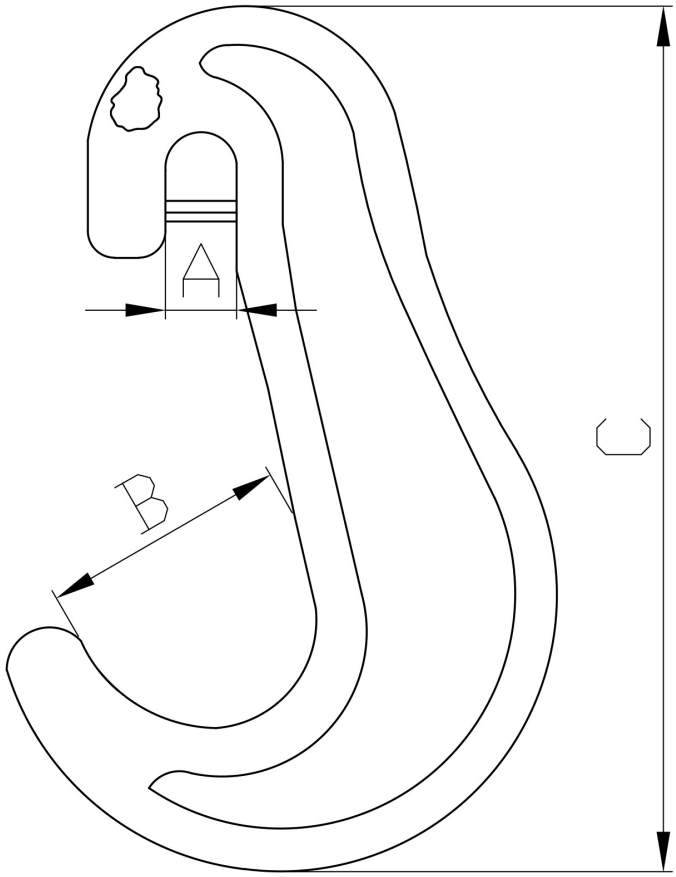

- Material : forged steel
- Finish : painted, electro galvanized, electro galvanized + painted, hot dip galvanized
- Packing & markings : as per customer request

Chain Ø mm	SWL kN / t painted	MBL kN / t painted	Weight kg	Dimensions (mm)		
				A	B	C
9	49 / 5	98 / 10	0.62	12	35	140
11	73.5 / 7.5	147 / 15	1.1	15	39	169
13	98 / 10	196 / 20	1.4	17	57	201

(Important note: Measures and weights without engagement. We reserve the right to change technical details.)

Stuut Lifting & Lashing - SLL Handelsvertretung e. K.
sales@marine-lashing.com
+49 5228 9628290
Version: 2023-01-20 Y
© Copyright Stuut Lifting & Lashing. All rights reserved.

Fittings for lashing chains

Flat eye hook 13mm

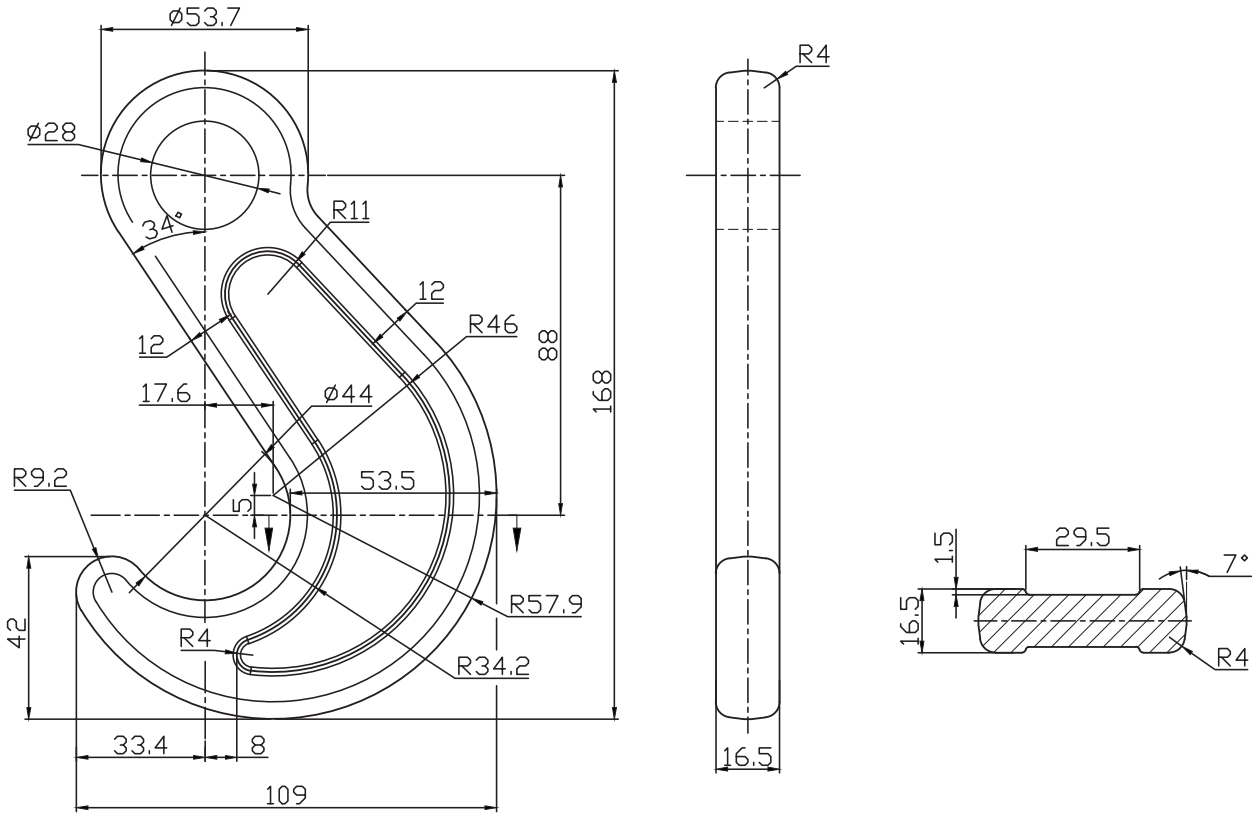

- Material : forged steel
- Finish : painted, electro galvanized, electro galvanized + painted, hot dip galvanized
- Packing : 1,000 pcs / box

Chain ø mm	SWL kN / t painted	MBL kN / t painted	Weight kg	Dimensions (mm)
13	98 / 10	196 / 20	1.1	see drawing

(Important note: Measures and weights without engagement. We reserve the right to change technical details.)

Stuut Lifting & Lashing - SLL Handelsvertretung e. K.
sales@marine-lashing.com
+49 5228 9628290

Version: 2023-01-20 Y
© Copyright Stuut Lifting & Lashing. All rights reserved.

Fittings for lashing chains

Eye hooks 11-13mm

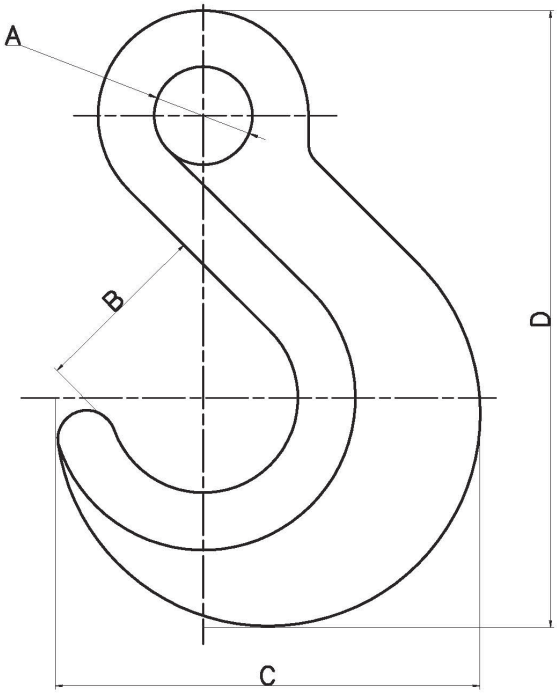

- Material : forged steel
- Finish : painted, electro galvanized, electro galvanized + painted, hot dip galvanized
- Packing & markings : as per customer request

Chain Ø mm	SWL kN / t painted	MBL kN / t painted	Weight kg	Dimensions (mm)			
				A	B	C	D
11 & 13	98 / 10	196/20	1.4	28	51	121	176

(Important note: Measures and weights without engagement. We reserve the right to change technical details.)

Stuut Lifting & Lashing - SLL Handelsvertretung e. K.
sales@marine-lashing.com
+49 5228 9628290
Version: 2023-01-23 Y
© Copyright Stuut Lifting & Lashing. All rights reserved.

Short link lashing chains & load binders

Short link lashing chains - endless

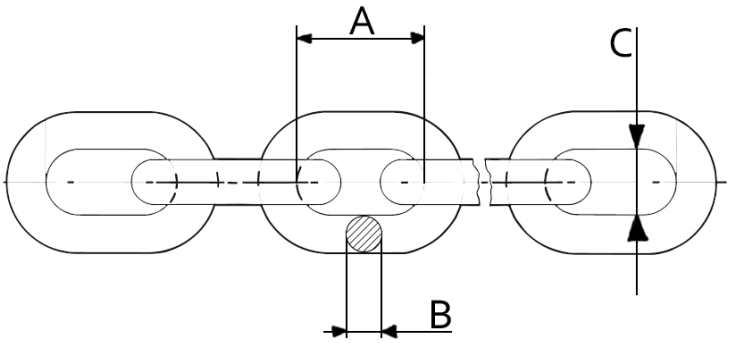

on request available as per EN818-2 standard

- Material : AG90L or 20Mn2
- Grade : G80 quenched and tempered
- Finish : black painted, black oxidized
- Certification : mill certificate
- Packing : drum
- Markings : YD8-x (x=diameter)

Chain ⌀ mm	Endless type WLL t	Endless type MBL kN	Weight kg / m (per m linear length)	Dimensions (mm)		
				A	B	C
6	2.24	90,4	0.8	18	6	8
8	4.00	160.8	1.4	24	8	11
10	6.30	252.0	2.2	30	10	14
13	10.6	424.0	3.8	39	13	18
16	16.0	644.0	5.7	48	16	22

(Important note: Measures and weights without engagement. We reserve the right to change technical details.)

Stuut Lifting & Lashing - SLL Handelsvertretung e. K.
sales@marine-lashing.com
+49 5228 9628290

Version: 2024-03-18 Y
© Copyright Stuut Lifting & Lashing. All rights reserved.

Short link lashing chains & load binders

G80 EN type lashing chain with clevis sling hook

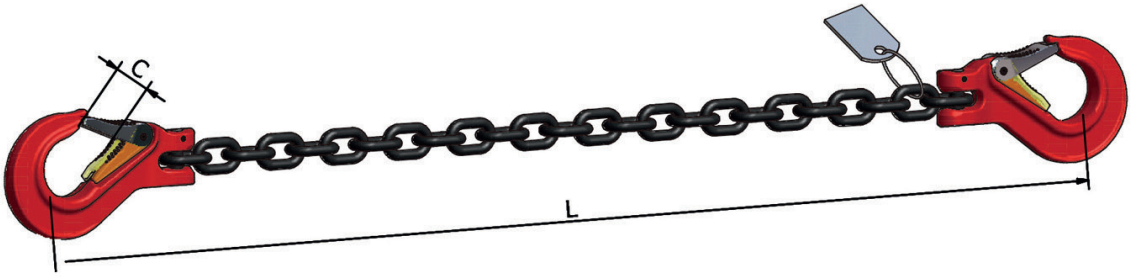

Applied norm EN12195-3

- Grade : G80
- Finish : chain - black painted, hooks - powder coated
- Certification : mill certificate to EN10204
- Packing : wooden box, drum or carton
- Note : available with plate warning tag

Part Number	Size	LC (kN)	Weight (kg)	Dimensions (mm)	
				C	L*
Q13606	6mm	22	3.2	22	3,500
Q13608	8mm	40	6.4	28	3,500
Q13610	10mm	63	10.3	36	3,500
Q13613	13mm	100	17.5	46	3,500

MBL equals 2 x lashing capacity
*L: any required length available

(Important note: Measures and weights without engagement. We reserve the right to change technical details.)

Stuut Lifting & Lashing - SLL Handelsvertretung e. K.
sales@marine-lashing.com
+49 5228 9628290

Version: 2024-03-18 Y
© Copyright Stuut Lifting & Lashing. All rights reserved.

Tension levers 9-11-13mm

Tension levers, round type

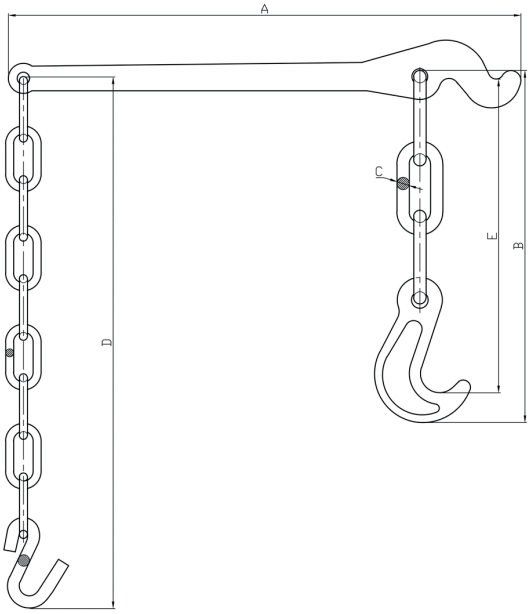

- Material : forged steel & high tensile steel
- Finish : painted, electro galvanized, electro galvanized + painted, hot dip galvanized
- Packing : as per customer request

Chain Ø mm	SWL kN / t painted	MBL kN / t painted	Weight kg	Dimensions (mm)				
				A	B	C	D	E
9	49 / 5	98 / 10	3.4	585	280	10	600	240
11	73.5 / 7.5	147 / 15	4.5	600	340	12	600	290
13	98 / 10	196 / 20	5.6	580	400	14	600	350

(Important note: Measures and weights without engagement. We reserve the right to change technical details.)

Stuut Lifting & Lashing - SLL Handelsvertretung e. K.
sales@marine-lashing.com
+49 5228 9628290

Version: 2024-03-18 Y
© Copyright Stuut Lifting & Lashing. All rights reserved.

Tension levers 9-11-13mm

Tension levers, square type

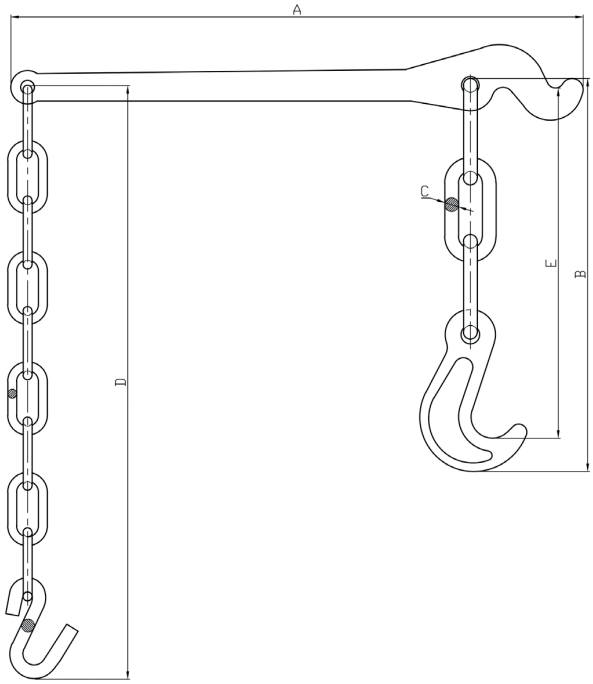

- Material : forged steel & high tensile steel
- Finish : painted, electro galvanized, electro galvanized + painted, hot dip galvanized
- Packing : as per customer request

Chain Ø mm	SWL kN / t painted	MBL kN / t painted	Weight kg	Dimensions (mm)				
				A	B	C	D	E
13	98 / 10	196 / 20	5.6	580	400	14	600	350

(Important note: Measures and weights without engagement. We reserve the right to change technical details.)

Stuut Lifting & Lashing - SLL Handelsvertretung e. K.
sales@marine-lashing.com
+49 5228 9628290

Version: 2024-03-18 Y
© Copyright Stuut Lifting & Lashing. All rights reserved.

Tension levers 9-11-13mm

Extension levers

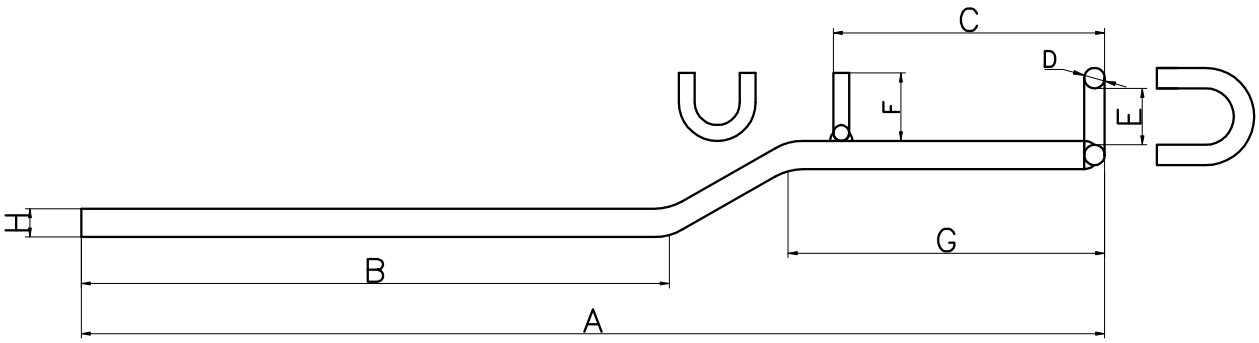

- Material : forged steel & bended steel wire
- Finish : primer painted
- Packing : as per customer request

Weight kg	Dimensions (mm)							
	A	B	C	D Ø	E	F	G	H Ø
3.9	905	520	240	18	50	60	280	25

(Important note: Measures and weights without engagement. We reserve the right to change technical details.)

Stuut Lifting & Lashing - SLL Handelsvertretung e. K.
sales@marine-lashing.com
+49 5228 9628290

Version: 2024-03-13 Y
© Copyright Stuut Lifting & Lashing. All rights reserved.

Speed lashing

Speed lashing - without fittings

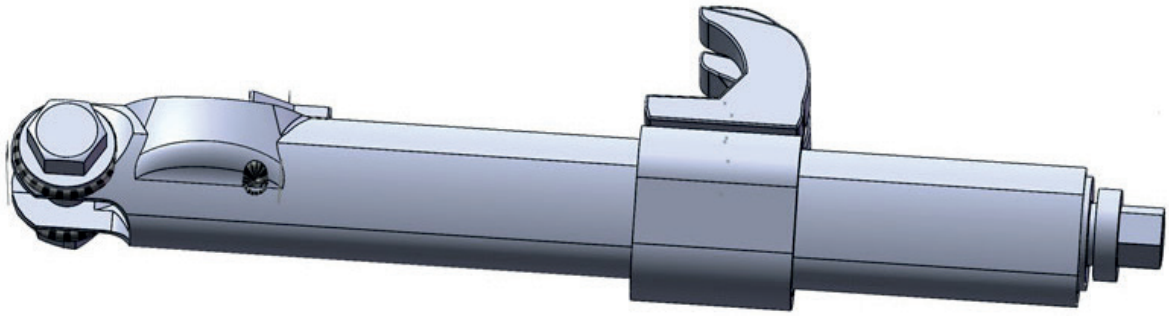

Dimensions (mm):

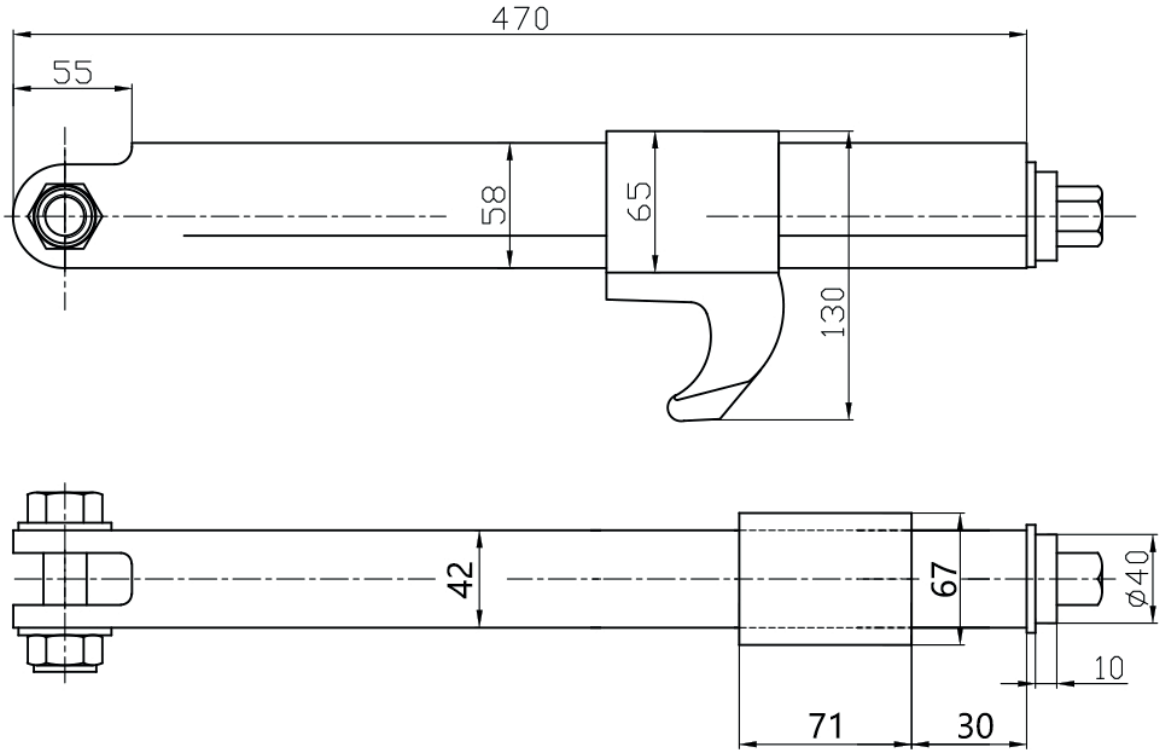

- Breaking load tension : 200 kN
- Material : steel
- Finish : hot dip galvanized
- Packing & markings : as per customer request
- Weight : 6.1 kg / piece

(Important note: Measures and weights without engagement. We reserve the right to change technical details.)

Stuut Lifting & Lashing - SLL Handelsvertretung e. K.
sales@marine-lashing.com
+49 5228 9628290

Version: 2024-03-13 Y
© Copyright Stuut Lifting & Lashing. All rights reserved.

Speed lashing

Speed lashing - with flat eye hook

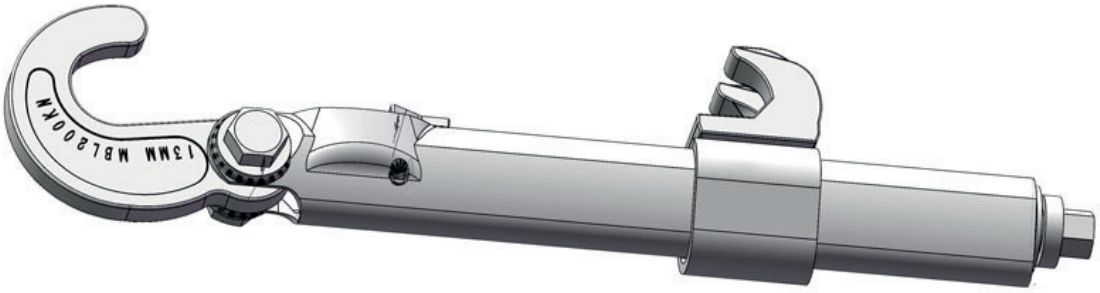

Dimensions (mm):

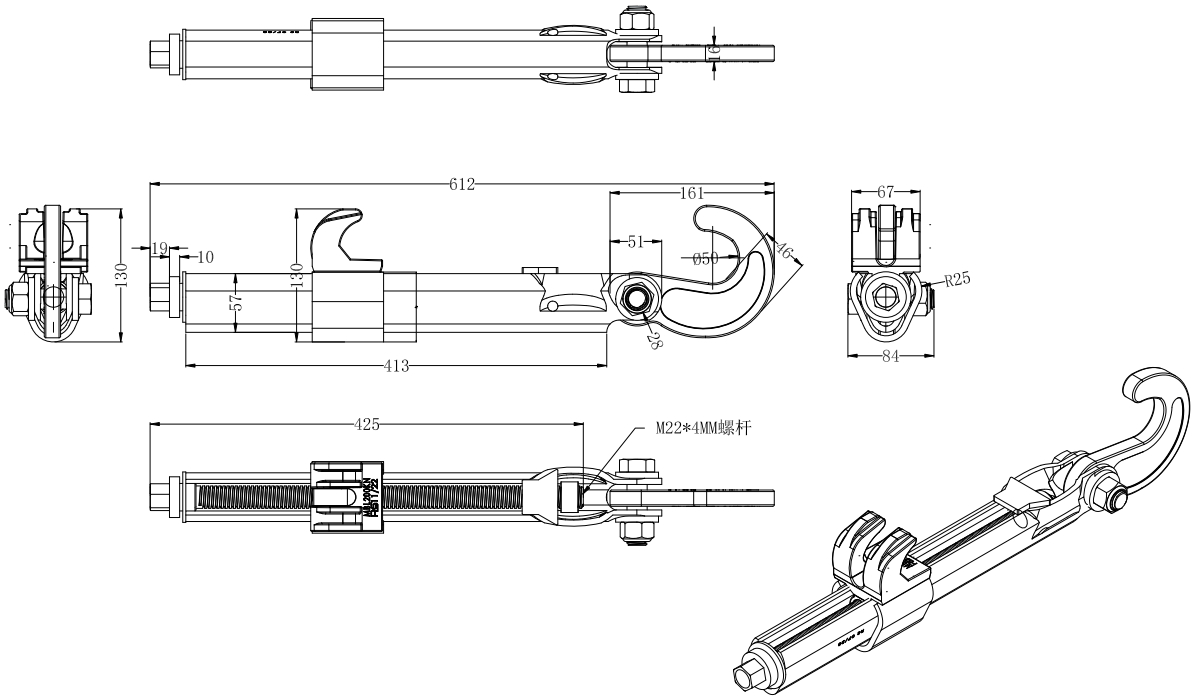

- Breaking load tension : 200 kN
- Material : steel
- Finish : hot dip galvanized
- Packing & markings : as per customer request
- Weight : 7.2 kg / piece

(Important note: Measures and weights without engagement. We reserve the right to change technical details.)

Stuut Lifting & Lashing - SLL Handelsvertretung e. K.
sales@marine-lashing.com
+49 5228 9628290

Version: 2024-03-18 Y
© Copyright Stuut Lifting & Lashing. All rights reserved.

Speed lashing

Speed lashing - with big eye hook

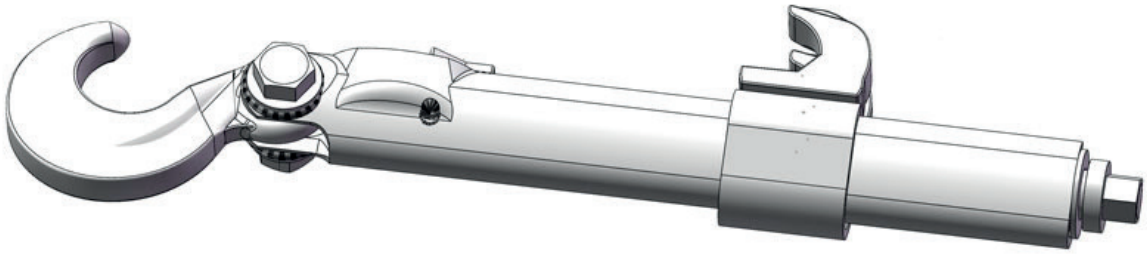

Dimensions (mm):

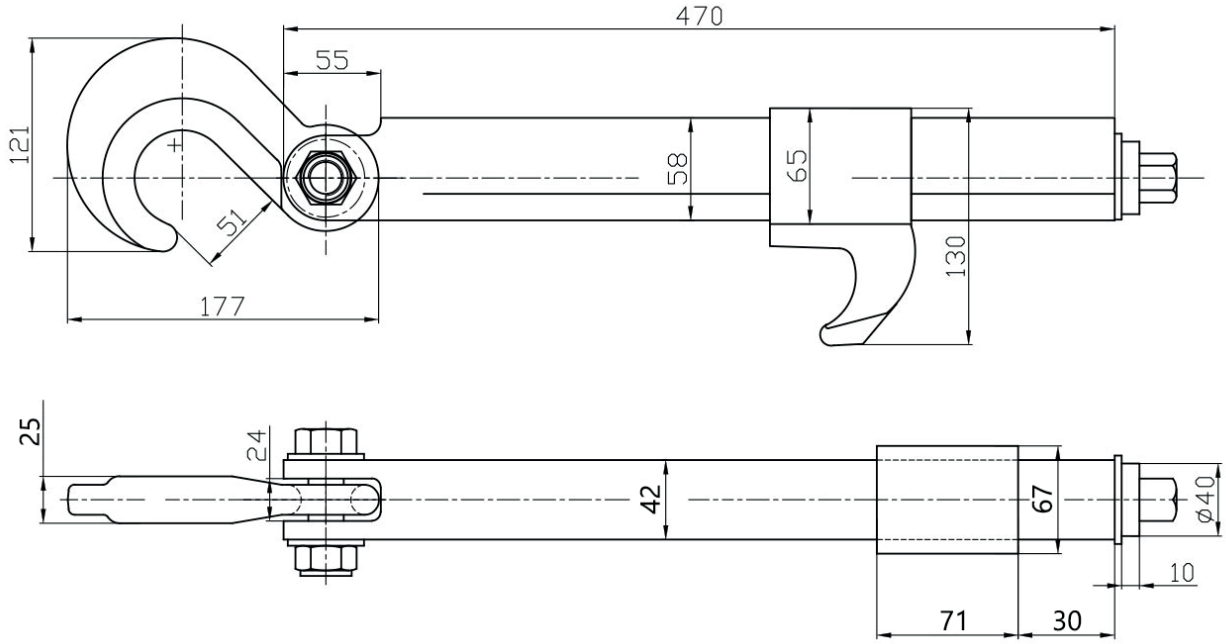

- Breaking load tension : 200 kN
- Material : steel
- Finish : hot dip galvanized
- Packing & markings : as per customer request
- Weight : 7.2 kg / piece

(Important note: Measures and weights without engagement. We reserve the right to change technical details.)

Stuut Lifting & Lashing - SLL Handelsvertretung e. K.
sales@marine-lashing.com
+49 5228 9628290

Version: 2024-03-18 Y
© Copyright Stuut Lifting & Lashing. All rights reserved.

Speed lashing

Speed lashing - with elephant foot

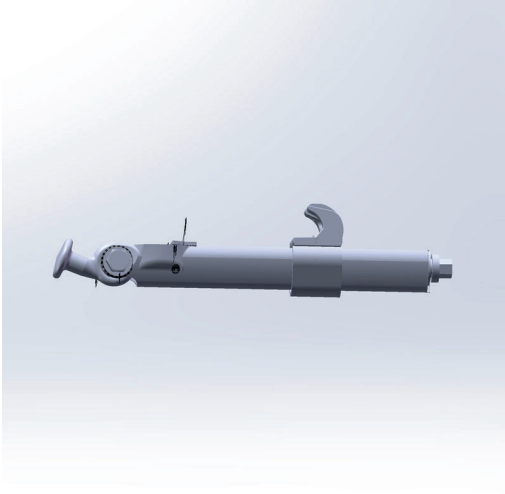

Dimensions (mm):

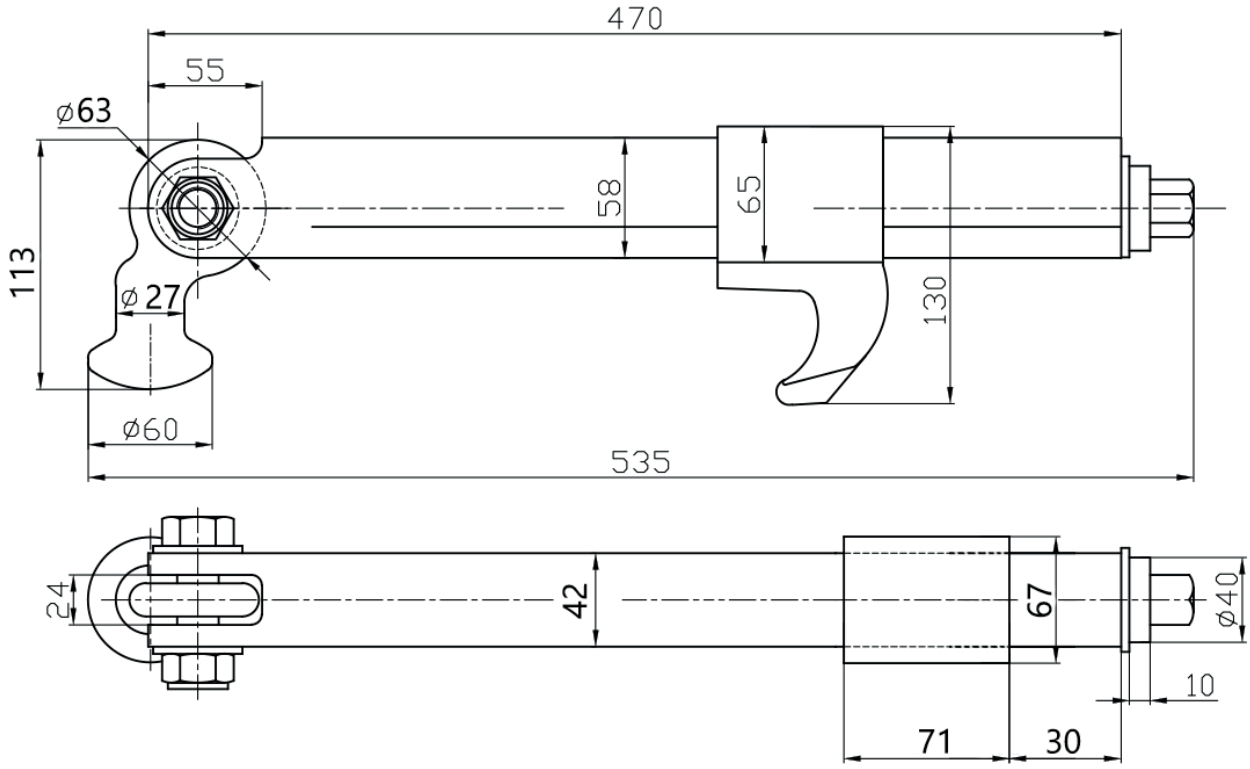

- Breaking load tension : 200 kN
- Material : steel
- Finish : hot dip galvanized
- Packing & markings : as per customer request
- Weight : 6.9 kg / piece

(Important note: Measures and weights without engagement. We reserve the right to change technical details.)

Stuut Lifting & Lashing - SLL Handelsvertretung e. K.
sales@marine-lashing.com
+49 5228 9628290

Version: 2024-03-19 Y
© Copyright Stuut Lifting & Lashing. All rights reserved.

Speed lashing

Speed lashing - with chain links and C-hook

Dimensions (mm):

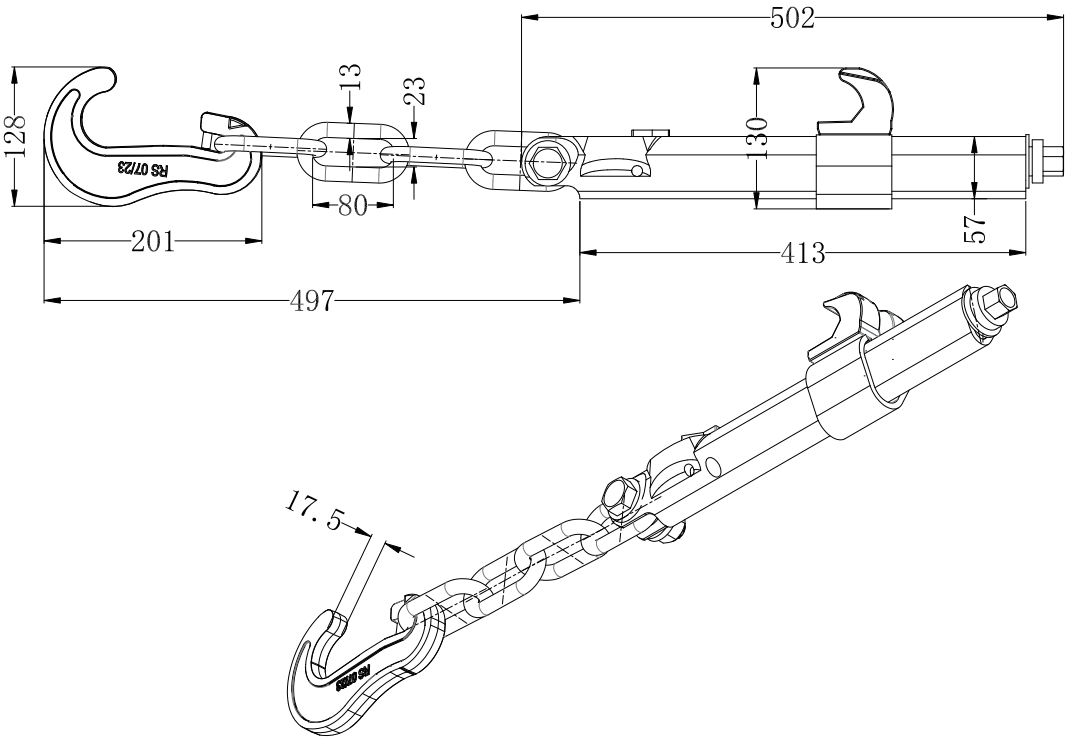

- Breaking load tension : 200 kN
- Material : steel
- Finish : hot dip galvanized
- Packing & markings : as per customer request
- Weight : 8.5 kg / piece

(Important note: Measures and weights without engagement. We reserve the right to change technical details.)

Stuut Lifting & Lashing - SLL Handelsvertretung e. K.
sales@marine-lashing.com
+49 5228 9628290

Version: 2024-03-19 Y
© Copyright Stuut Lifting & Lashing. All rights reserved.

Speed lashing

Speed lashing - with big link, eye hook and elephant hook

Dimensions (mm):

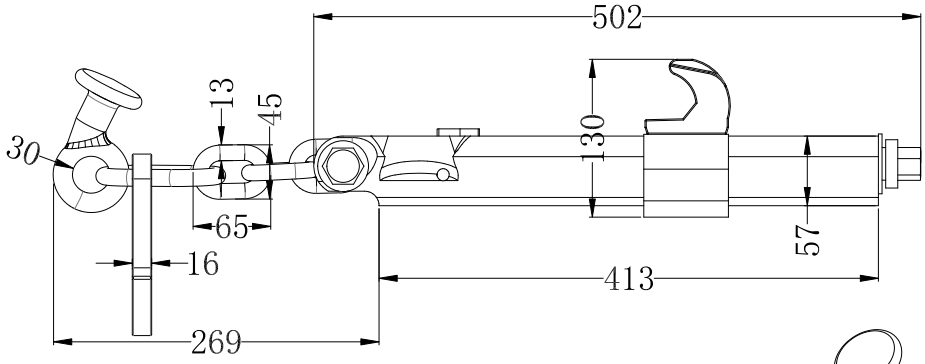

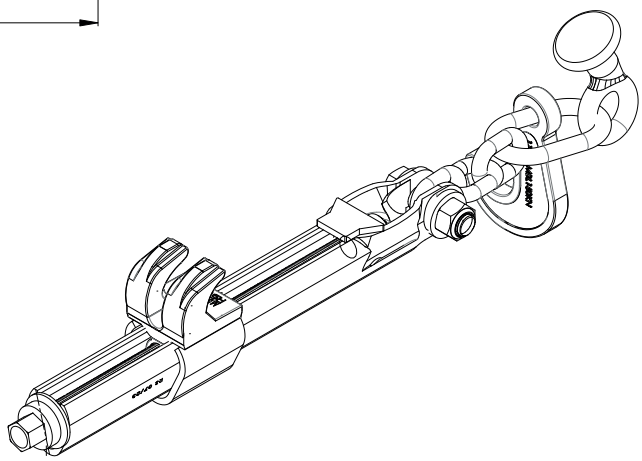

- Breaking load tension : 200 kN
- Material : steel
- Finish : hot dip galvanized
- Packing & markings : as per customer request
- Weight : 9.2 kg / piece

(Important note: Measures and weights without engagement. We reserve the right to change technical details.)

Stuut Lifting & Lashing - SLL Handelsvertretung e. K.
sales@marine-lashing.com
+49 5228 9628290

Version: 2024-03-19 Y
© Copyright Stuut Lifting & Lashing. All rights reserved.

Weld-on D-rings

D-ring MBL 20T

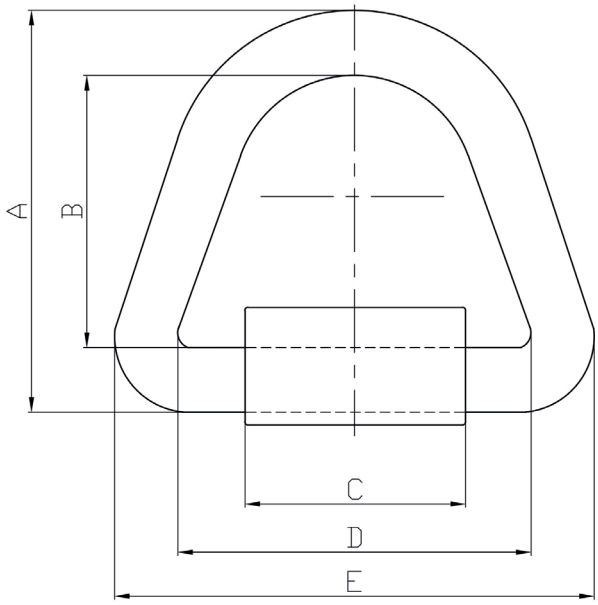

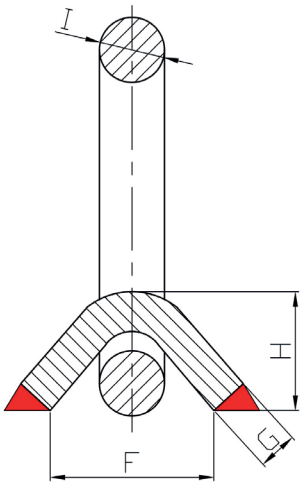

- Material : ring forged steel | plate bent steel
- Finish : as per customer request, normally natural black, oiled, hot dipped galvanized, with corrosion inhibitor or with zinc primer
- Packing & markings : as per customer request

Type	SWL kN / t painted	MBL kN / t painted	Strap Weight kg	Ring Weight kg	Dimensions (mm)								
					A	B	C	D	E	F	G	H	I
D20	98 / 10	196 / 20	0.44	0.86	128	89	80	89	132	48	10	31	19

(Important note: Measures and weights without engagement. We reserve the right to change technical details.)

Stuut Lifting & Lashing - SLL Handelsvertretung e. K.
sales@marine-lashing.com
+49 5228 9628290

Version: 2024-04-13 Y
© Copyright Stuut Lifting & Lashing. All rights reserved.

Weld-on D-rings

D-ring MBL 25T

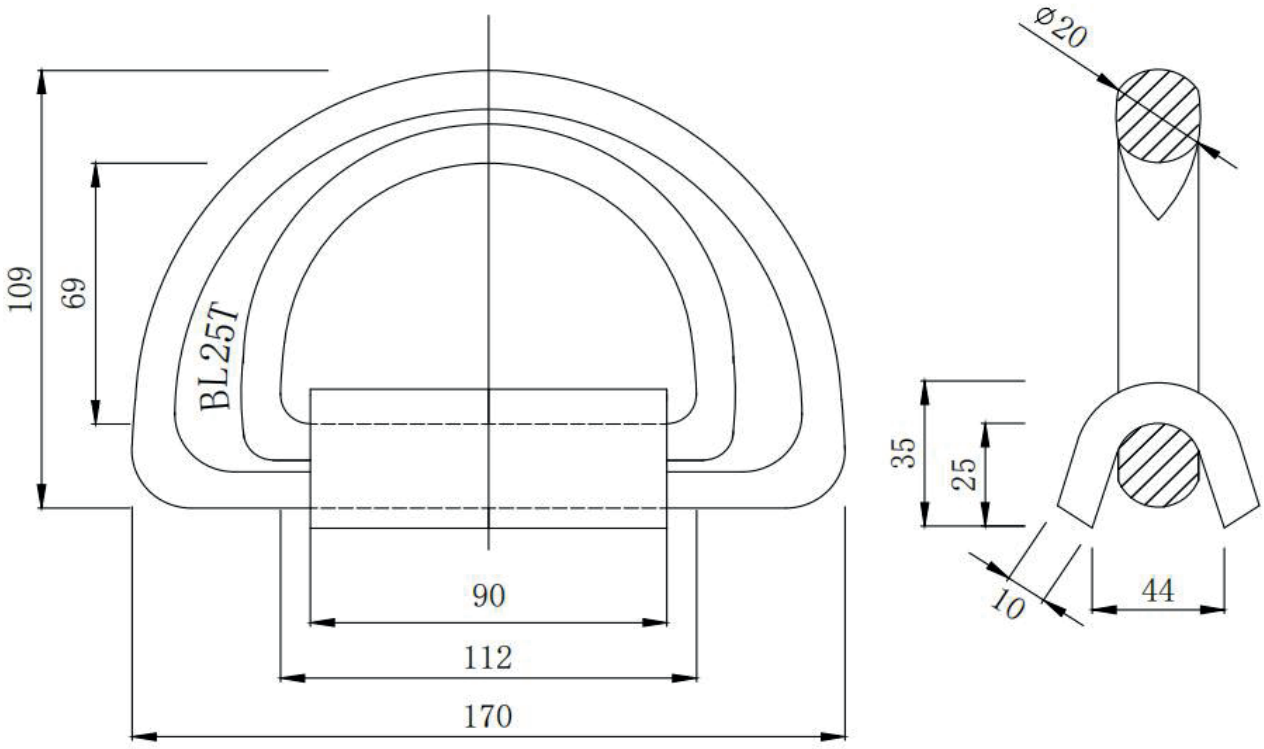

- Material : ring forged steel | plate bent steel
- Finish : as per customer request, normally natural black, oiled, hot dipped galvanized, with corrosion inhibitor or with zinc primer
- Packing : 800 pcs / box

Type	SWL kN / t	MBL kN / t	Cap Weight kg	Ring Weight kg
D25	122.6 / 12.5	245.2 / 25	0.56	1.1

(Important note: Measures and weights without engagement. We reserve the right to change technical details.)

Stuut Lifting & Lashing - SLL Handelsvertretung e. K.
sales@marine-lashing.com
+49 5228 9628290

Version: 2024-03-14 Y
© Copyright Stuut Lifting & Lashing. All rights reserved.

D-rings

D-ring MBL 36T & MBL 40T

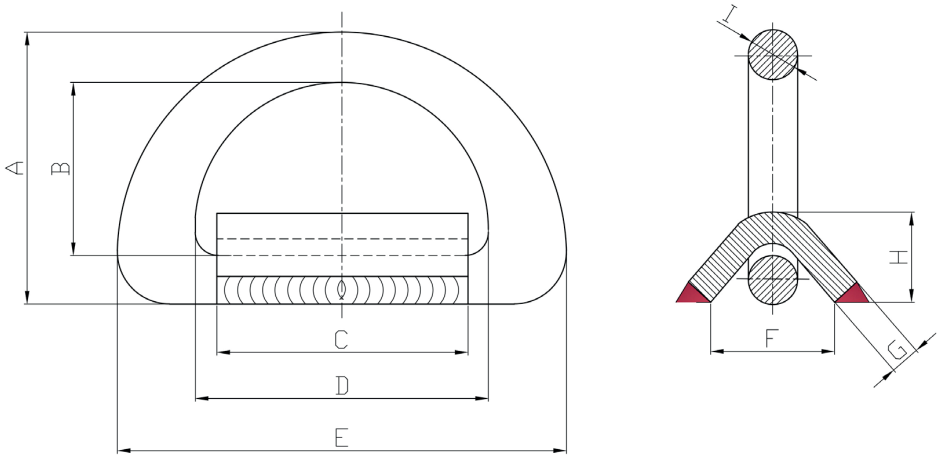

- Material : ring forged steel | plate bent steel
- Finish : as per customer request, normally natural black, oiled, hot dipped galvanized (ring only), with corrosion inhibitor or with zinc primer
- Packing & markings : as per customer request

Type	SWL kN / t painted	MBL kN / t painted	Strap Weight kg	Ring Weight kg	Dimensions (mm)								
					A	B	C	D	E	F	G	H	I
D36	176.5 / 18	353 / 36	0.8	1.7	120	79	120	130	200	55	10	37	23
D40	196 / 20	392 / 40	0.8	1.7	120	79	120	130	200	55	10	37	23

(Important note: Measures and weights without engagement. We reserve the right to change technical details.)

Stuut Lifting & Lashing - SLL Handelsvertretung e. K.
sales@marine-lashing.com
+49 5228 9628290

Version: 2024-03-14 Y
© Copyright Stuut Lifting & Lashing. All rights reserved.

Weld-on D-rings

D-ring MBL 50T, type A

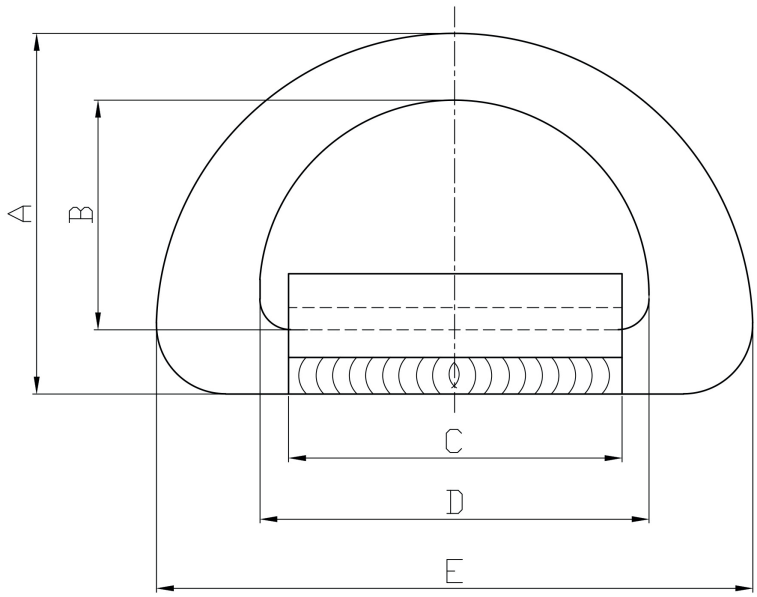

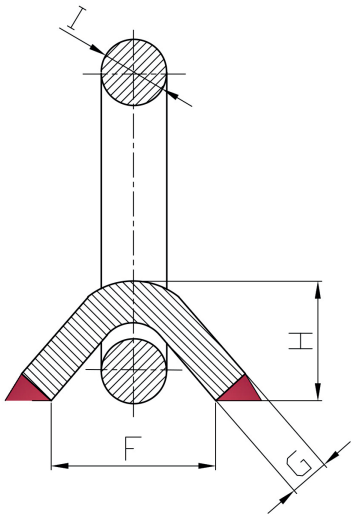

- Material : ring forged steel | plate bent steel
- Finish : as per customer request, normally natural black, oiled, hot dipped galvanized, with corrosion inhibitor or with zinc primer
- Packing & markings : as per customer request

Type	SWL kN / t	MBL kN / t	Strap Weight kg	Ring Weight kg	Dimensions (mm)								
					A	B	C	D	E	F	G	H	I
D50 A	245 / 25	490 / 50	1.73	2.55	132	80	130	150	230	67	16	47	26

(Important note: Measures and weights without engagement. We reserve the right to change technical details.)

Stuut Lifting & Lashing - SLL Handelsvertretung e. K.
sales@marine-lashing.com
+49 5228 9628290

Version: 2024-03-14 Y
© Copyright Stuut Lifting & Lashing. All rights reserved.

Weld-on D-rings

D-ring MBL 50T, type B

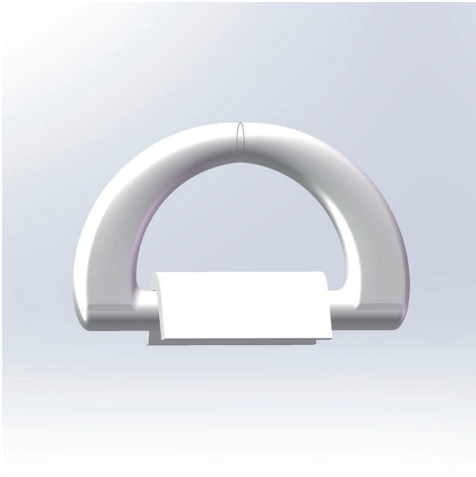

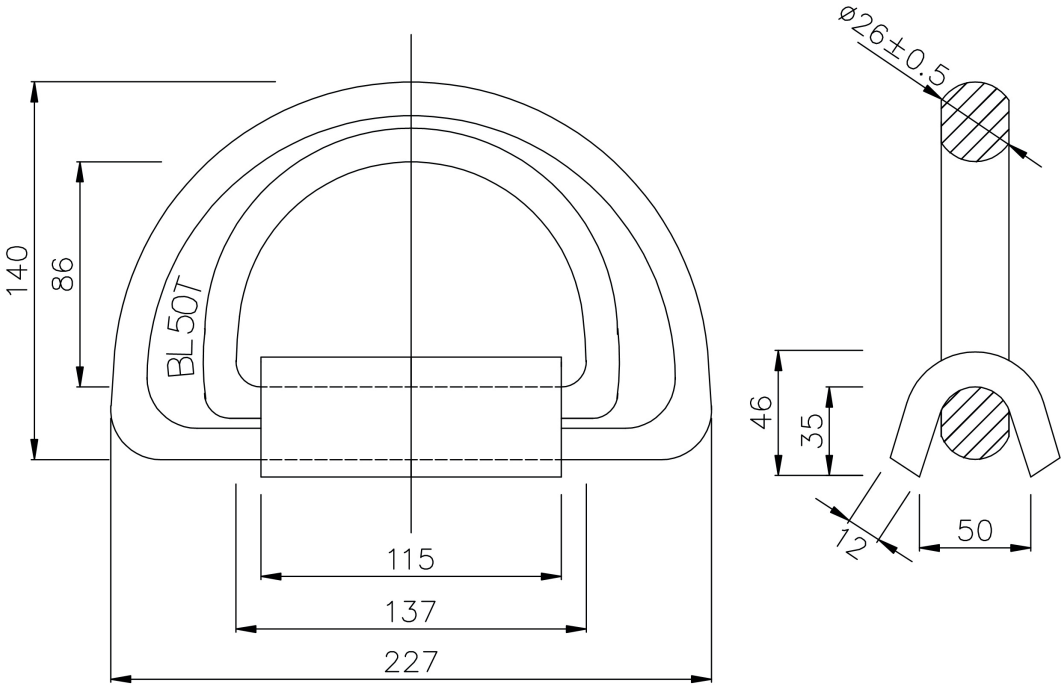

- Material : ring forged steel | plate bent steel
- Finish : as per customer request, normally natural black, oiled, hot dipped galvanized, with corrosion inhibitor or with zinc primer
- Packing & markings : as per customer request

Type	SWL kN / t	MBL kN / t	Cap Weight kg	Ring Weight kg
D50 B	245 / 25	490 / 50	1.2	2.8

(Important note: Measures and weights without engagement. We reserve the right to change technical details.)

Stuut Lifting & Lashing - SLL Handelsvertretung e. K.
sales@marine-lashing.com
+49 5228 9628290

Version: 2024-03-14 Y
© Copyright Stuut Lifting & Lashing. All rights reserved.

Weld-on D-rings

D-ring MBL 67T

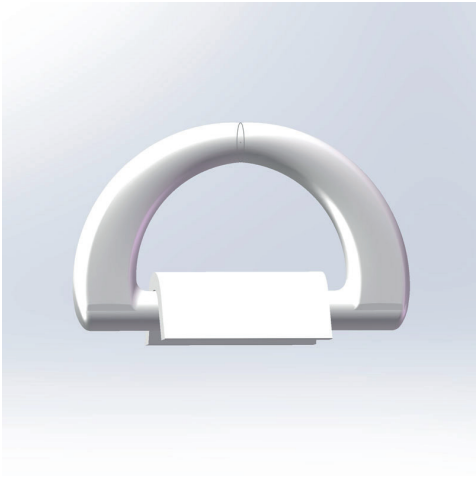

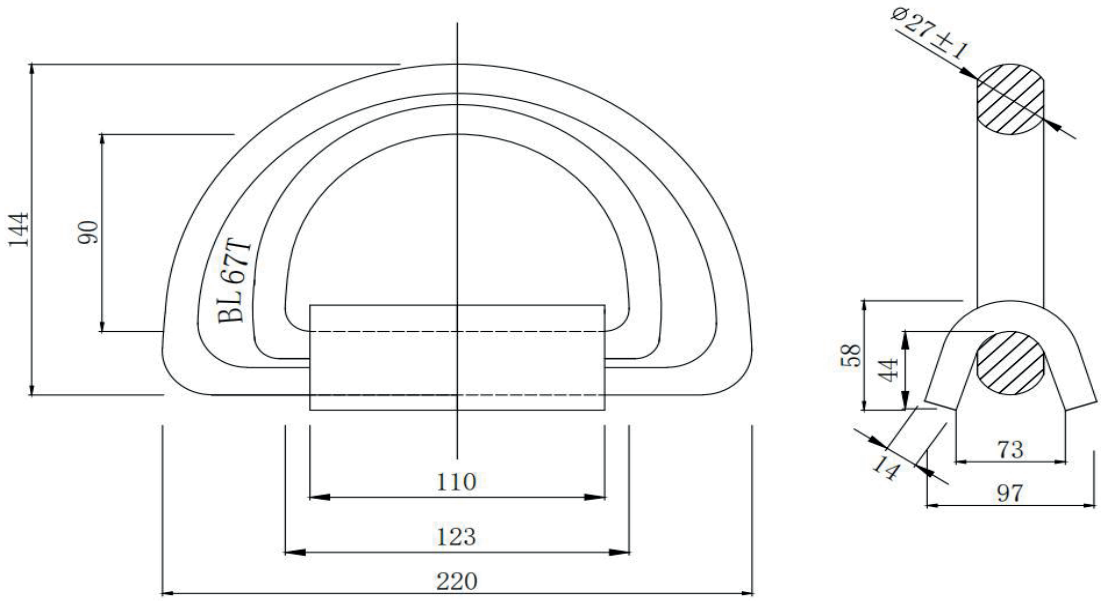

- Material : ring forged steel | plate bent steel
- Finish : as per customer request, normally natural black, oiled, hot dipped galvanized, with corrosion inhibitor or with zinc primer
- Packing : ring - 300 pcs / case
  cap - 500 pcs / case

Type	SWL kN / t	MBL kN / t	Cap Weight kg	Ring Weight kg
D67	328 / 33.5	657 / 67	1.55	3

(Important note: Measures and weights without engagement. We reserve the right to change technical details.)

Stuut Lifting & Lashing - SLL Handelsvertretung e. K.
sales@marine-lashing.com
+49 5228 9628290

Version: 2024-03-14 Y
© Copyright Stuut Lifting & Lashing. All rights reserved.

Lashing bars

Lashing bar

Dimensions (mm):

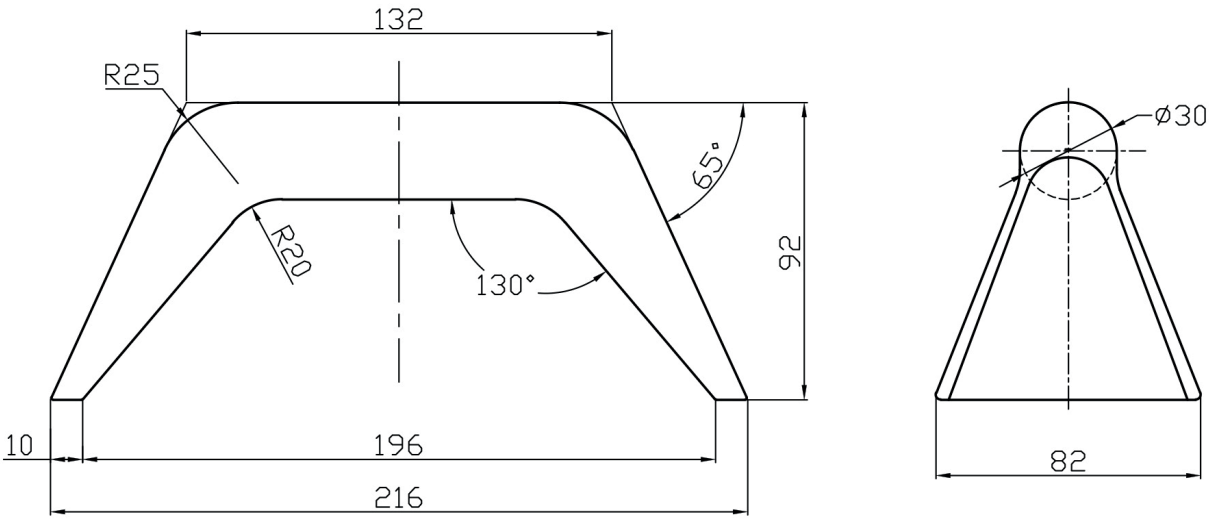

- Material : forged steel
- Finish : as per customer request, normally natural black, oiled, with corrosion inhibitor or with zinc primer
- Packing & markings : as per customer request
- Weight : 1.96 kg / piece

(Important note: Measures and weights without engagement. We reserve the right to change technical details.)

Stuut Lifting & Lashing - SLL Handelsvertretung e. K.
sales@marine-lashing.com
+49 5228 9628290

Version: 2024-03-14 Y
© Copyright Stuut Lifting & Lashing. All rights reserved.

Stopper plates

Stopper plates - various

Various dimensions and shapes possible
Laser - cut

Example:

200 x 200 x 20 mm

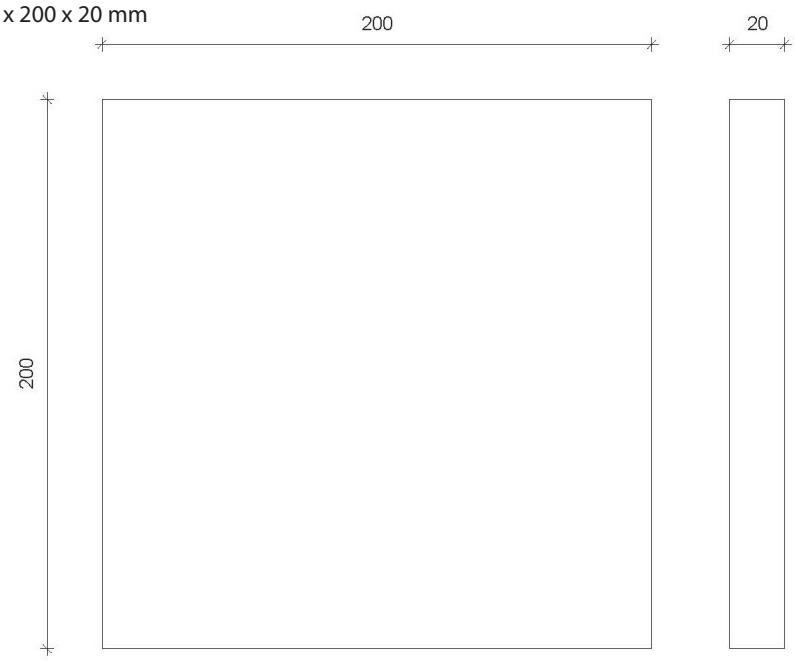

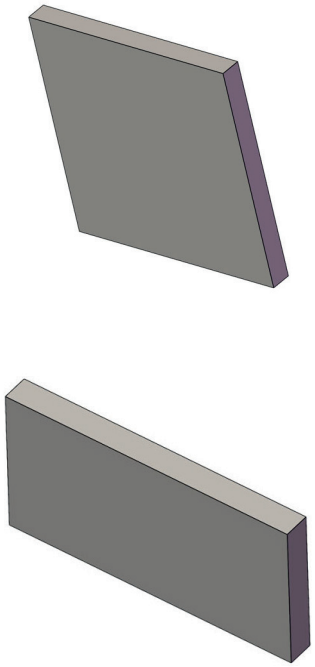

Example:

Z - Type

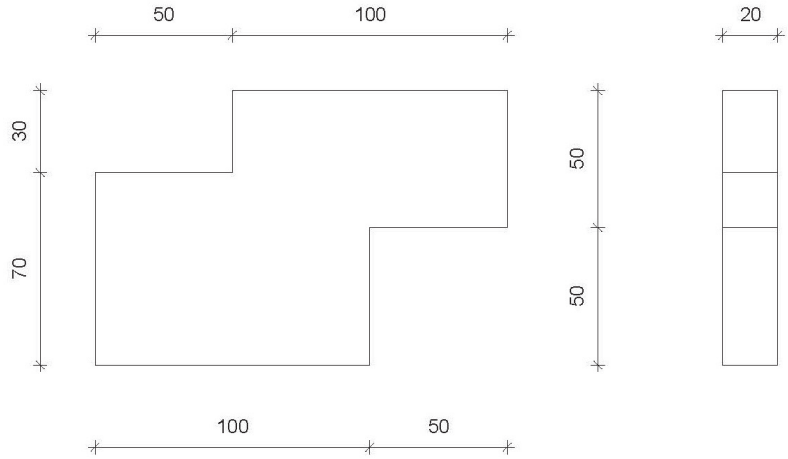

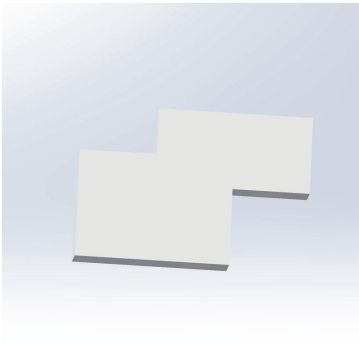

- Material : high tensile steel
- Thickness : 16, 18, 20mm - on request alternative thickness possible
- Finish : as per customer request, normally natural black, oiled or with corrosion inhibitor
- Packing : as per customer request

(Important note: Measures and weights without engagement. We reserve the right to change technical details.)

Stuut Lifting & Lashing - SLL Handelsvertretung e. K.
sales@marine-lashing.com
+49 5228 9628290

Version: 2024-03-26 Y
© Copyright Stuut Lifting & Lashing. All rights reserved.

Shackles

US type bow shackles screw pin

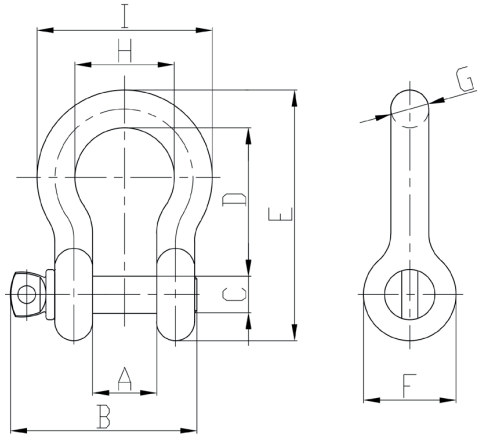

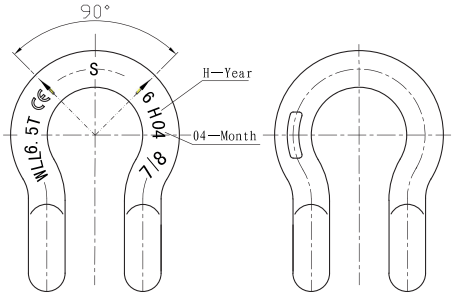

- Safety factor : 6:1
- Material : forged & high tensile steel, grade 6
- Standard : generally to US Fed. Spec. RR-C-271
- Finish : body - hot dipped galvanized & pin - powder coated
- Markings : WLL, CE, S, 6, batch code, size
- Packing : as per customer request

Size inch	WLL t	Weight kg	Dimensions (mm)								
			A	B	C	D	E	F	G	H	I
1/2	2	0.33	21	68	16	48	83	30	13	33	59
5/8	3.25	0.62	27	85	19	61	106	38	16	43	75
3/4	4.75	1.07	32	101	22	71	126	46	19	51	89
7/8	6.5	1.66	37	114	25	84	143	53	22	58	102
1	8.5	2.42	43	129	29	95	167	61	25	68	119
1 1/8	9.5	3.36	46	142	32	108	190	68	30	74	131
1 1/4	12	4.31	52	157	35	119	210	79	33	83	146
1 3/8	13.5	6.01	57	174	38	133	233	84	36	92	162
1 1/2	17	7.8	61	187	41	146	254	92	39	99	175
1 3/4	25	13.79	73	231	51	178	313	106	47	127	225
2	35	20.2	83	263	57	197	348	122	53	146	253
2 1/2	55	39.0	105	330	70	267	453	145	69	184	327

(Important note: Measures and weights without engagement. We reserve the right to change technical details.)

Stuut Lifting & Lashing - SLL Handelsvertretung e. K.
sales@marine-lashing.com
+49 5228 9628290

Version: 2023-02-01 Y
© Copyright Stuut Lifting & Lashing. All rights reserved.

Shackles

US type bow shackles safety pin

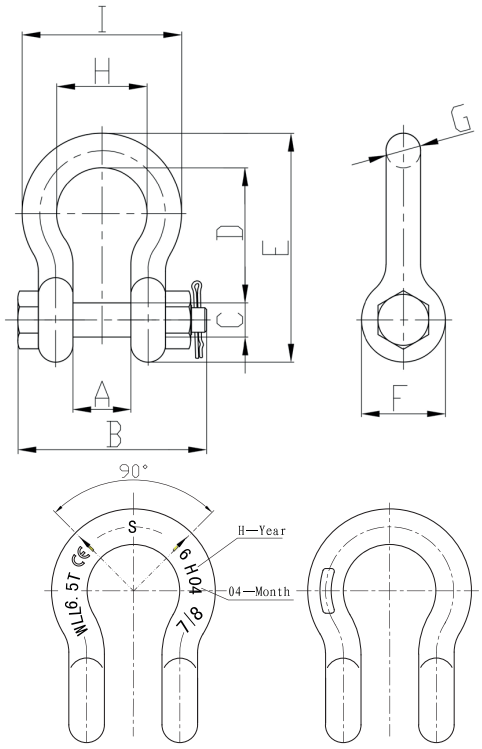

- Safety factor : 6:1
- Material : forged & high tensile steel, grade 6
- Standard : generally to US Fed. Spec. RR-C-271
- Finish : body - hot dipped galvanized & pin - powder coated
- Markings : WLL, CE, S, 6, batch code, size
- Packing : as per customer request

Size inch	WLL t	Weight kg	Dimensions (mm)								
			A	B	C	D	E	F	G	H	I
1/2	2	0.35	21	72	16	48	83	30	13	33	59
5/8	3.25	0.76	27	90	19	61	106	38	16	43	75
3/4	4.75	1.23	32	103	22	71	126	46	19	51	89
7/8	6.5	1.79	37	120	25	84	143	53	22	58	102
1	8.5	2.77	43	135	29	95	167	61	25	68	119
1 1/8	9.5	3.75	46	129	32	108	190	68	30	74	131
1 1/4	12	5.31	52	165	35	119	210	79	33	83	146
1 3/8	13.5	7.18	57	183	38	133	233	84	36	92	162
1 1/2	17	9.43	61	196	41	146	254	92	39	99	175
1 3/4	25	15.38	73	230	51	178	313	106	47	127	225
2	35	23.7	83	264	57	197	348	122	53	146	253
2 1/2	55	44.57	105	344	70	267	453	145	69	184	327
3	85	76.0	127	419	83	330	546	165	76	200	365

(Important note: Measures and weights without engagement. We reserve the right to change technical details.)

Stuut Lifting & Lashing - SLL Handelsvertretung e. K.
sales@marine-lashing.com
+49 5228 9628290

Version: 2023-02-01 Y
© Copyright Stuut Lifting & Lashing. All rights reserved.

Shackles

Lashing shackle, bow type, oversized

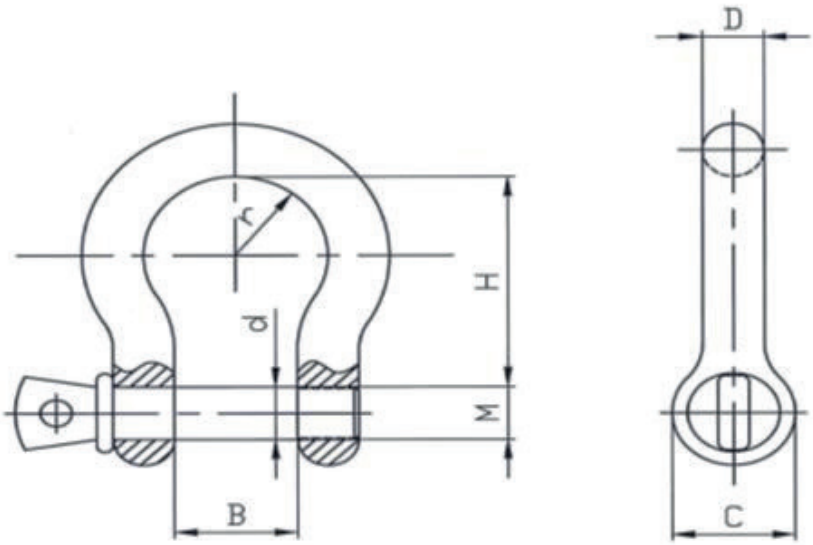

- Material : high tensile steel body | forged pin
- Markings : body - batch code & MBL20T | pin - batch code
- Finish : normally green painted, alternative as per customer request
- Packing : as per customer request

Type	MBL t	Weight kg	Dimensions (mm)					
			D	d	B	H	C	2r
M19	8.8	0.865	19	19	38	80	38	60
M25	16.8	1.961	25	25	50	100	49	75
M32	28	4.2	32	32	64	129	62	96
M38	40	6.81	38	38	76	151	74	114
M50	50	16.0	50	50	102	200	108	156

(Important note: Measures and weights without engagement. We reserve the right to change technical details.)

Stuut Lifting & Lashing - SLL Handelsvertretung e. K.
sales@marine-lashing.com
+49 5228 9628290

Version: 2024-03-14 Y
© Copyright Stuut Lifting & Lashing. All rights reserved.

Fittings for lashing chains

Lashing D-shackles, MBL 20T, screw pin

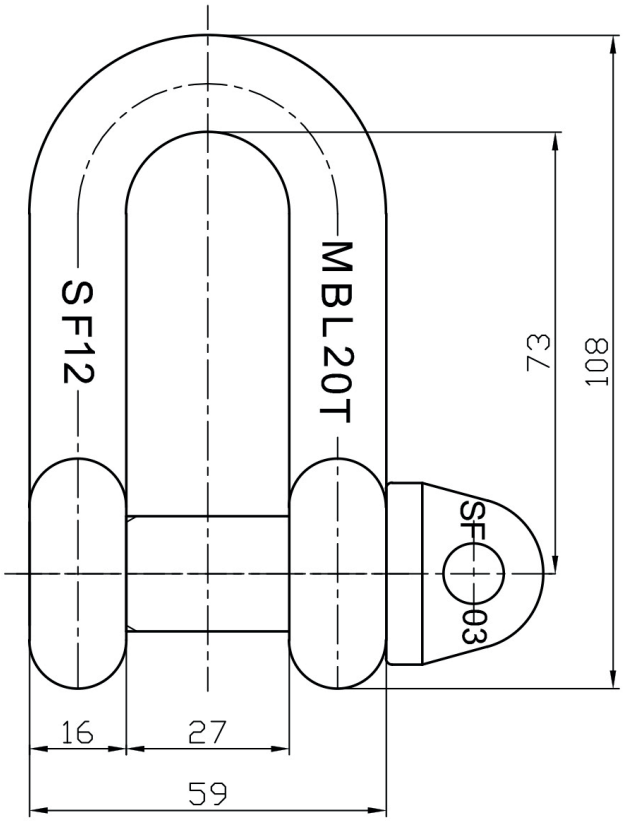

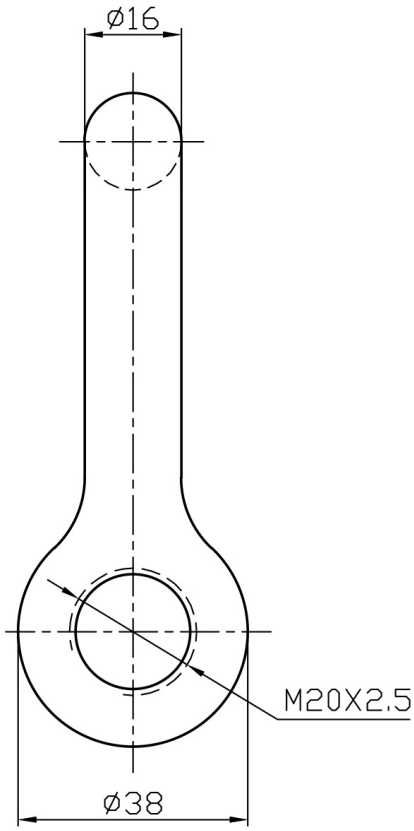

- Material : high tensile steel body | forged pin
- Markings : body - batch code & MBL20T | pin - batch code
- Finish : normally green painted, alternative as per customer request
- Packing : as per customer request
- Weight : 0.56 kg / piece

(Important note: Measures and weights without engagement. We reserve the right to change technical details.)

Stuut Lifting & Lashing - SLL Handelsvertretung e. K.
sales@marine-lashing.com
+49 5228 9628290

Version: 2024-03-14 Y
© Copyright Stuut Lifting & Lashing. All rights reserved.

Turnbuckles

Hamburger turnbuckle 2.0

Innovative solution with both sides clevis type connection!

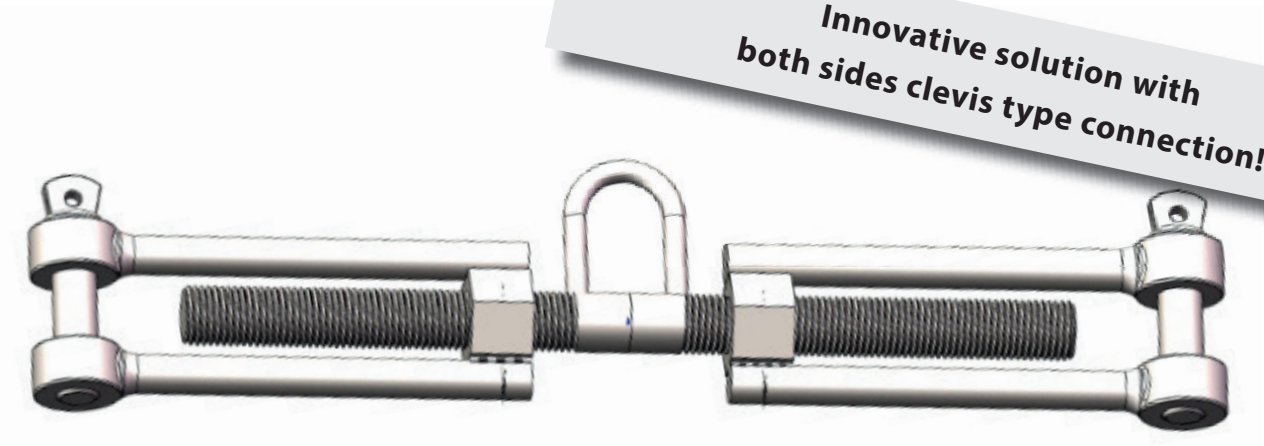

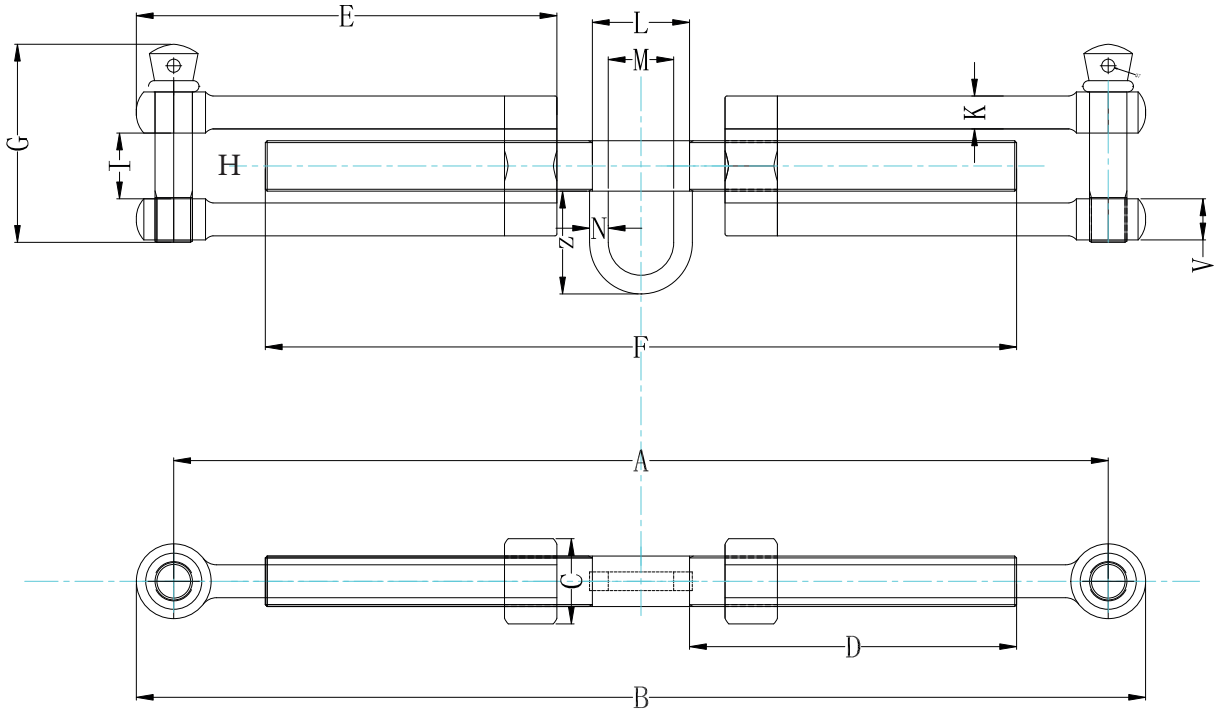

- Material : mild steel
- Finish : self colored, electro galvanized or hot dip galvanized
- Packing : as per customer request

Type	SWL kN	MBL kN	Weight kg
HBT200	100	200	4.2

Dimensions (mm)														
A	B	C	D	E	F	G	H	I	K	L	M	N	V	Z
500	504	47.5	175	225	402	106	39	35.2	17.6	55	35	10	22	55

(Important note: Measures and weights without engagement. We reserve the right to change technical details.)

Stuut Lifting & Lashing - SLL Handelsvertretung e. K.
sales@marine-lashing.com
+49 5228 9628290

Version: 2024-03-12 Y
© Copyright Stuut Lifting & Lashing. All rights reserved.

Turnbuckles

Hamburger turnbuckle

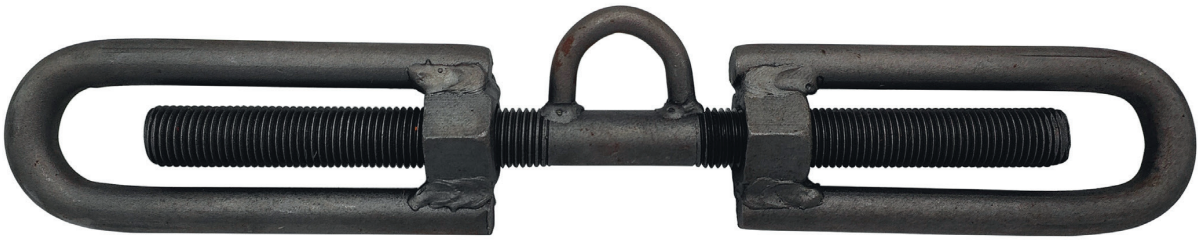

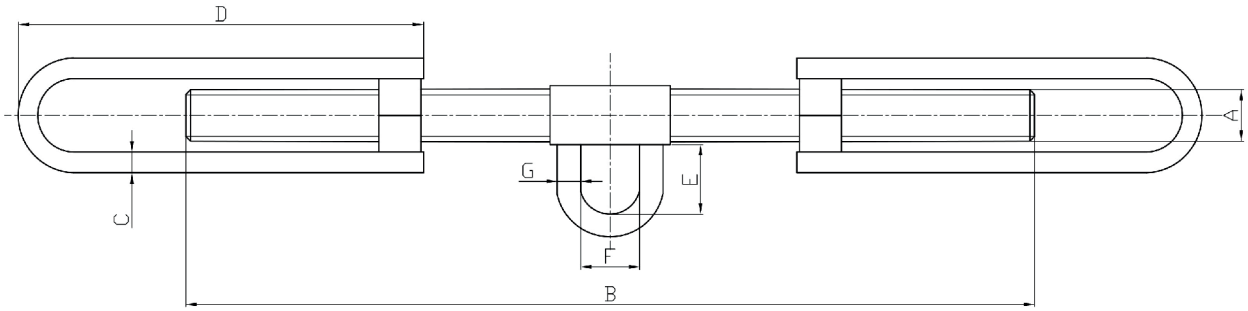

- Material : mild steel
- Finish : self colored, electro galvanized or hot dip galvanized
- Packing : as per customer request

Type	SWL kN / t	MBL kN / t	Weight kg	Dimensions (mm)						
				A	B	C	D	E	F	G
M20 x 500	44 / 4.5	88 / 9	2.8	20	500	16	230	30	40	12
M24 x 400	63.5 / 6.5	127 / 13	2.8	24	400	16	200	30	40	12
M27 x 400	98 / 10	196 / 20	4	27	400	20	200	30	40	12
M30 x 400	108 / 11	216 / 22	5	30	400	22	200	30	40	12
M32 x 400	122.5 / 12.5	245 / 25	5.5	32	400	22	200	30	40	12
M36 x 400	147 / 15	294 / 30	6.8	36	400	25	200	30	40	12

(Important note: Measures and weights without engagement. We reserve the right to change technical details.)

Stuut Lifting & Lashing - SLL Handelsvertretung e. K.
sales@marine-lashing.com
+49 5228 9628290

Version: 2023-01-31 Y
© Copyright Stuut Lifting & Lashing. All rights reserved.

Turnbuckles

US type turnbuckle, jaw - eye, drop forged

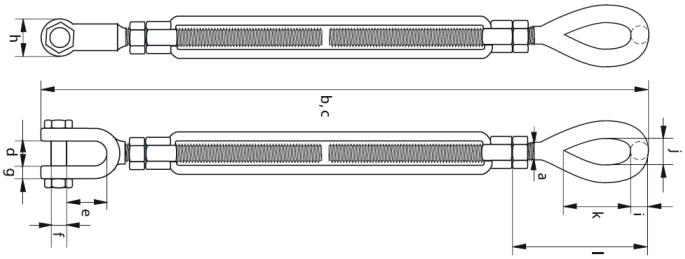

- Material : drop forged high tensile steel
- Finish : hot dip galvanized
- Meet federal specifications : FF-T791b, Type 1 Form 1
- WLL : MBL = 5 x WLL | Proof load = 2,5 x WLL
- Packing : as per customer request

Size	WLL t	Weight kg	Dimensions (mm)							
			a	b	c	d	e	j	k	l
1/4 x 4″	0.23	0.14	6.35	288.29	186.69	11.43	15.75	8.64	19.81	44.45
5/16 x 1 1/2″	0.36	0.23	7.87	348.23	221.23	12.7	22.1	11.18	23.88	53.09
3/8 x 6″	0.54	0.36	9.65	426.97	274.57	13.72	22.1	13.46	28.45	64.01
1/2 x 6″	1	0.68	12.7	489.97	312.17	13.97	26.92	18.29	36.07	82.04
1/2 x 9″	1	0.78	12.7	642.37	388.37	13.97	26.92	18.29	36.07	82.04
1/2 x 12″	1	0.94	12.7	794.77	464.57	13.97	26.92	18.29	36.07	82.04
5/8 x 6″	1.59	1.07	16	533.15	349	20.83	33.27	22.35	45.72	99.06
5/8 x 9″	1.59	1.44	16	685.55	425.2	20.83	33.27	22.35	45.72	99.06
5/8 x 12″	1.59	1.64	16	837.95	501.4	20.83	33.27	22.35	45.75	99.06
3/4 x 6″	2.36	1.81	19.05	576.33	385.83	26.16	38.1	25.40	53.09	119.13
3/4 x 9″	2.36	2.15	19.05	728.73	462.03	26.16	38.1	25.40	53.09	119.13
3/4 x 12″	2.36	2.69	19.05	881.13	538.23	26.16	38.1	25.40	53.09	119.13
3/4 x 18″	2.36	3.18	19.05	1,185.93	690.63	26.16	38.1	25.40	53.09	119.13
7/8 x 12″	3.27	3.79	22.35	916.69	567.44	31.24	44.45	31.75	60.45	129.54
7/8 x 18″	3.27	4.42	22.35	1,221.49	719.84	31.24	44.45	31.75	60.45	129.54
1 x 6″	4.54	4.05	25.4	669.04	465.84	33.27	52.32	36.58	76.2	161.54
1 x 12″	4.54	5.08	25.4	973.84	618.24	33.27	52.32	36.58	76.2	161.54
1 x 18″	4.54	6.03	25.4	1,278.64	770.64	33.27	52.32	36.58	76.2	161.54
1 x 24″	4.54	7.71	25.4	1,583.44	923.04	33.27	52.32	36.58	76.2	161.54
1 1/4 x 12″	6.89	8.81	31.75	1,049.53	681.23	47.24	71.37	45.97	90.42	196.09
1 1/4 x 18″	6.89	10.97	31.75	1,354.33	833.63	47.24	71.37	45.97	90.42	196.09
1 1/4 x 24″	6.89	12.93	31.75	1,659.13	986.03	47.24	71.37	45.97	90.42	196.09
1 1/2 x 12″	9.71	13.15	38.1	1,104.9	647.7	57.15	71.37	53.85	103.12	218.95
1 1/2 x 18″	9.71	15.88	38.1	1,409.7	876.3	57.15	71.37	53.85	103.12	218.95
1 1/2 x 24″	9.71	17.77	38.2	1,714.5	1,028.7	57.15	71.37	53.85	103.12	218.95
1 3/4 x 18″	12.7	24.38	44.45	1,406.65	949.45	66.04	85.85	60.45	117.35	254
1 3/4 x 24″	12.7	27.52	44.45	1,711.45	1,101.85	66.04	85.85	60.45	117.35	254
2 x 24″	16.78	40.37	50.8	1,844.55	1,234.95	66.55	93.73	68.33	146.05	332.49
2 1/2 x 24″	27.22	68.04	63.5	1,925.32	1,315.72	77.72	112.78	79.25	165.1	350.01
2 3/4 x 24″	34.02	83.01	69.85	1,978.15	1,368.55	93.47	106.43	82.55	177.8	386.59

(Important note: Measures and weights without engagement. We reserve the right to change technical details.)

Stuut Lifting & Lashing - SLL Handelsvertretung e. K.
sales@marine-lashing.com
+49 5228 9628290

Version: 2023-02-03 Y
© Copyright Stuut Lifting & Lashing. All rights reserved.

Turnbuckles

US type turnbuckle, hook - hook, drop forged

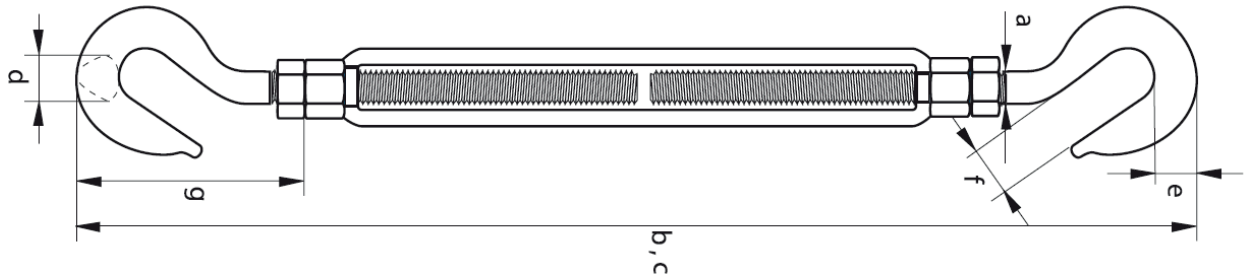

- Material : drop forged high tensile steel
- Finish : hot dip galvanized
- Meet federal specifications : FF-T791b, Type 1 Form 1
- WLL : MBL = 5 x WLL | Proof load = 2,5 x WLL
- Packing : as per customer request

Size	WLL t	Weight kg	Dimensions (mm)					
			a	b	c	e	f	g
1/4 x 4″	0.18	0.14	6.35	303.28	201.68	10.41	11.43	40.39
5/16 x 1 1/2″	0.32	0.21	7.87	350.77	236.47	12.7	12.7	49.28
3/8 x 6″	0.45	0.35	9.65	450.09	297.69	15.49	14.22	58.42
1/2 x 6″	0.68	0.73	12.7	517.65	339.85	19.81	16.76	74.68
1/2 x 9″	0.68	0.83	12.7	670.05	416.05	19.81	16.76	74.68
1/2 x 12″	0.68	1.03	12.7	822.45	492.25	19.81	16.76	74.68
5/8 x 6″	1.02	1.25	16	571.5	387.35	25.4	22.86	93.73
5/8 x 9″	1.02	1.53	16	723.9	463.55	25.4	22.86	93.73
5/8 x 12″	1.02	1.59	16	876.3	539.75	25.4	22.86	93.73
3/4 x 6″	1.36	1.76	19.05	629.41	438.91	30.48	24.89	114.81
3/4 x 9″	1.36	2.4	19.05	781.81	515.11	30.48	24.89	114.81
3/4 x 12″	1.36	2.46	19.05	934.21	591.31	30.48	24.89	114.81
3/4 x 18″	1.36	3.68	19.05	1,239.01	734.71	30.48	24.89	114.81
7/8 x 12″	1.81	3.67	22.35	984.25	635	34.93	28.7	131.83
7/8 x 18″	1.81	4.51	22.35	1,289.05	787.4	34.93	28.7	131.83
1 x 6″	2.27	4.23	25.4	728.73	525.53	38.86	31.75	148.34
1 x 12″	2.27	5.41	25.4	1,033.53	677.93	38.86	31.75	148.34
1 x 18″	2.27	6.35	25.4	1,338.33	830.33	38.86	31.75	148.34
1 x 24″	2.27	7.82	25.4	1,643.13	982.73	38.86	31.75	148.34
1 1/4 x 12″	2.95	9.34	31.75	1,119.12	750.82	45.97	38.1	183.39
1 1/4 x 18″	2.95	10.43	31.75	1,423.92	903.22	45.97	38.1	183.39
1 1/4 x 24″	2.95	12.25	31.75	1,728.72	1,055.62	45.97	38.1	183.39
1 1/2 x 12″	3.4	12.47	38.1	1,204.98	823.98	44.45	47.75	211.84
1 1/2 x 18″	3.4	14.06	38.1	1,509.78	976.38	44.2	47.75	211.84
1 1/2 x 24″	3.4	17.01	38.1	1,814.58	1,128.78	44.45	47.75	211.84

(Important note: Measures and weights without engagement. We reserve the right to change technical details.)

Stuut Lifting & Lashing - SLL Handelsvertretung e. K.
sales@marine-lashing.com
+49 5228 9628290

Version: 2023-02-03 Y
© Copyright Stuut Lifting & Lashing. All rights reserved.

Turnbuckles

US type turnbuckle, eye - eye, drop forged

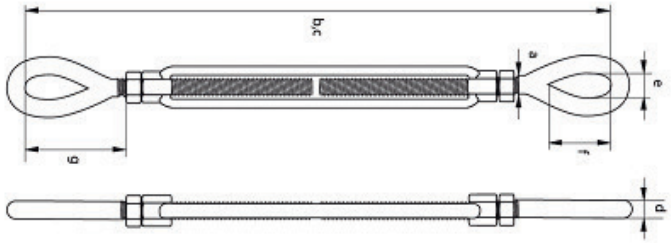

- Material : drop forged high tensile steel
- Finish : hot dip galvanized
- Meet federal specifications : FF-T791b, Type 1 Form 1
- WLL : MBL = 5 x WLL | Proof load = 2,5 x WLL
- Packing : as per customer request

Size	WLL t	Weight kg	Dimensions (mm)						
			a	b	c	d	e	f	g
1/4 x 4″	0.22	0.12	6.35	299.7	198.1	5.7	8.63	19.8	38.7
5/16 x 1 1/2″	0.36	0.2	7.87	344.4	230.1	7.1	11.17	23.8	45.9
3/8 x 6″	0.54	0.34	9.6	443.7	291.3	8.76	13.46	28.4	55.2
1/2 x 6″	0.99	0.69	12.7	510	332.2	11.17	18.28	36.06	70.8
1/2 x 9″	0.99	0.76	12.7	662	408.4	11.17	18.28	36.06	70.8
1/2 x 12″	0.99	0.97	12.7	814.8	484.6	11.17	18.28	36.06	70.8
5/8 x 6″	1.58	1.09	16	557	372.8	12.7	22.35	45.7	86.36
5/8 x 9″	1.58	1.28	16	709.4	449	12.7	22.35	45.7	86.36
5/8 x 12″	1.58	1.55	16	861.8	525.2	12.7	22.35	45.7	86.36
3/4 x 6″	2.35	1.72	19	606.5	416	15.7	25.4	53.08	103.4
3/4 x 9″	2.35	2.09	19	758.9	492.2	15.7	25.4	53.08	103.4
3/4 x 12″	2.35	2.48	19	911.3	568.4	15.7	25.4	53.08	103.4
3/4 x 18″	2.35	3.26	19	1,216	720.8	15.7	25.4	53.08	103.4
7/8 x 12″	3.26	3.27	22.35	941.5	592.3	19.05	31.75	60.4	110.49
7/8 x 18″	3.26	4.51	22.35	1,246.3	744.7	19.05	31.75	60.4	110.49
1 x 6″	4.5	4.1	25.4	710.4	507.2	22.2	36.5	76.2	139.3
1 x 12″	4.5	5.2	25.4	1,015	659.6	22.2	36.5	76.2	139.3
1 x 18″	4.5	6.3	25.4	1,320	812	22.2	36.5	76.2	139.3
1 x 24″	4.5	7.8	25.4	1,624.8	964.4	22.2	36.5	76.2	139.9
1 1/4 x 12″	6.89	8.6	31.7	1,087.3	718.8	28.5	45.9	90.4	167.5
1 1/4 x 18″	6.89	10.4	31.7	1,392	871.4	28.5	45.9	90.4	167.5
1 1/4 x 24″	6.89	12.2	31.7	1,696.9	1,023.8	28.5	45.9	90.4	167.5
1 1/2 x 12″	9.7	12.4	38.1	1,155.7	774.7	31.7	53.8	103.1	187.2
1 1/2 x 18″	9.7	14	38.1	1,460.5	927	31.7	53.8	103.1	187.2
1 1/2 x 24″	9.7	17	38.2	1,765.3	1,079.5	31.7	53.8	103.1	187.2
1 3/4 x 18″	12.7	23.8	44.4	1,457.4	1,000.2	38.1	60.4	117.3	215.9
1 3/4 x 24″	12.7	26.3	44.4	1,762	1,152.6	38.1	60.4	117.3	215.9
2 x 24″	16.7	38.6	50.8	1,922.5	1,312.9	44.45	68.3	146	288
2 1/2 x 24″	27.02	65.4	64	1,996.9	1,387.3	50.8	79.2	165.1	299.2
2 3/4 x 24″	34	87.9	69.8	2,057.4	1,447.8	57.1	82.5	177.8	329.4

(Important note: Measures and weights without engagement. We reserve the right to change technical details.)

Stuut Lifting & Lashing - SLL Handelsvertretung e. K.
sales@marine-lashing.com
+49 5228 9628290

Version: 2023-02-03 Y
© Copyright Stuut Lifting & Lashing. All rights reserved.

Turnbuckles

US type turnbuckle, jaw - jaw, drop forged

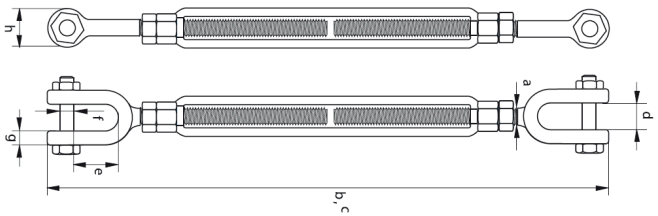

- Material : drop forged high tensile steel
- Finish : hot dip galvanized
- Meet federal specifications : FF-T791b, Type 1 Form 1
- WLL : MBL = 5 x WLL | Proof load = 2,5 x WLL
- Packing : as per customer request

Size	WLL t	Weight kg	Dimensions (mm)				
			a	b	c	d	e
1/4 x 4″	0.23	0.16	6.35	302.26	200.66	11.43	15.75
5/16 x 1 1/2″	0.36	0.24	7.874	353.06	238.76	12.7	22.1
3/8 x 6″	0.54	0.37	9.652	441.45	289.05	13.72	22.1
1/2 x 6″	1	0.71	12.7	508	330.2	13.97	26.92
1/2 x 9″	1	0.79	12.7	660.4	406.4	13.97	26.92
1/2 x 12″	1	1.09	12.7	812.8	482.6	13.97	26.92
5/8 x 6″	1.59	1.23	16.002	562.1	377.95	20.83	33.27
5/8 x 9″	1.59	1.56	16.002	714.5	454.15	20.83	33.27
5/8 x 12″	1.59	1.77	15.002	866.9	539.35	20.83	33.27
3/4 x 6″	2.36	1.86	19.05	612.14	421.64	26.16	38.1
3/4 x 9″	2.36	2.48	19.05	764.54	497.84	26.16	38.1
3/4 x 12″	2.36	2.92	19.05	916.94	574.04	26.16	38.1
3/4 x 18″	2.36	3.66	19.05	1,221.74	726.44	26.16	38.1
7/8 x 12″	3.27	3.71	22.352	966.98	617.73	31.24	44.45
7/8 x 18″	3.27	4.89	22.352	1,271.78	770.13	31.24	44.45
1 x 6″	4.54	4.62	25.4	712.72	509.52	33.27	52.32
1 x 12″	4.54	5.68	25.4	1,017.52	661.92	33.27	52.32
1 x 18″	4.54	6.87	25.4	1,322.32	814.32	33.27	52.32
1 x 24″	4.54	8.2	25.4	1,627.12	966.72	33.27	52.32
1 1/4 x 12″	6.89	9.34	31.75	1,118.62	750.32	47.24	71.37
1 1/4 x 18″	6.89	11.19	31.75	1,423.42	902.72	47.24	71.37
1 1/4 x 24″	6.89	12.79	31.75	1,728.22	1,055.12	47.24	71.37
1 1/2 x 12″	9.71	13.92	38.1	1,181.1	800.1	57.15	71.37
1 1/2 x 18″	9.71	16.67	38.1	1,485.9	952.5	57.15	71.37
1 1/2 x 24″	9.71	18.45	38.1	1,790.7	1,104.9	57.15	71.37
1 3/4 x 18″	12.7	24.49	44.45	1,503.17	1,045.97	66.04	85.85
1 3/4 x 24″	12.7	28.74	44.45	1,807.97	1,198.37	66.04	85.85
2 x 24″	16.78	42.75	50.8	1,948.69	1,339.09	66.55	93.73
2 1/2 x 24″	27.22	74.84	63.5	2,087.37	1,477.77	77.72	112.78
2 3/4 x 24″	34.02	89.81	69.85	2,171.7	1,562.1	93.47	106.43

(Important note: Measures and weights without engagement. We reserve the right to change technical details.)

Stuut Lifting & Lashing - SLL Handelsvertretung e. K.
sales@marine-lashing.com
+49 5228 9628290

Version: 2023-02-03 Y
© Copyright Stuut Lifting & Lashing. All rights reserved.

Turnbuckles

DIN 1480 turnbuckle, hook - hook

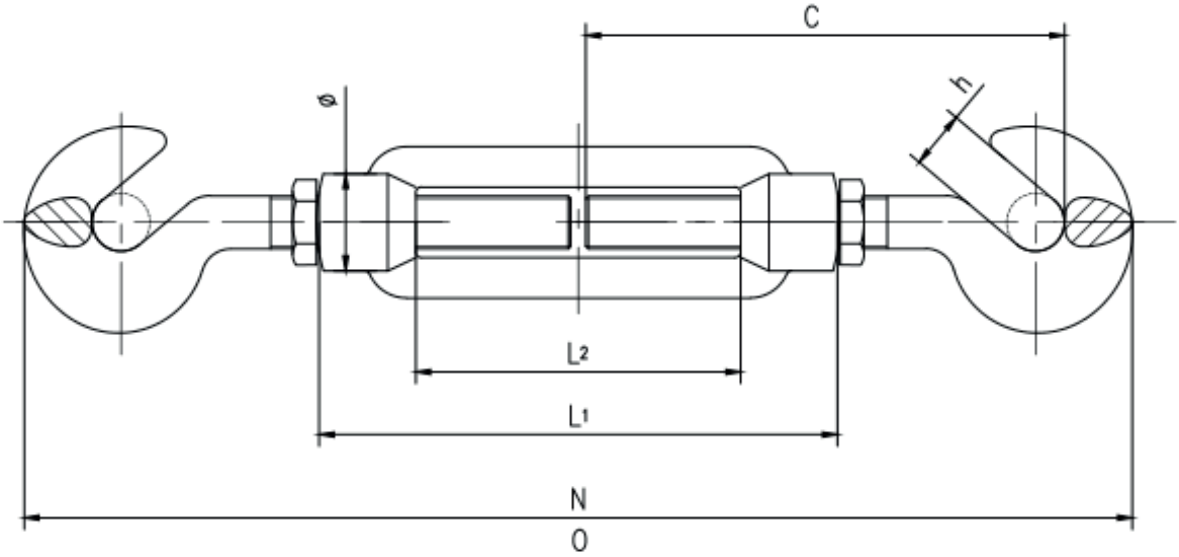

- Material : body - steel Q235 (steel grade equivalent to S235JR)
- Finish : electro galvanized
- Standard : DIN1480
- Markings : body - L, size, CE

Size	Dimensions (mm)						
	C	h	L1	L2	ϕ	N (min.)	O (max.)
M12	117.0	15.5	125.0	80.0	21.0	234.0	314.0
M14	122.0	18.5	140.0	90.0	25.0	244.0	334.0
M16	138.0	19.0	170.0	110.0	27.0	276.0	384.0
M20	170.0	20.5	200.0	130.0	34.0	340.0	470.0
M22	185.0	26.0	220.0	145.0	36.0	370.0	515.0
M24	205.0	26.0	255.0	170.0	39.0	410.0	580.0
M27	210.0	30.0	255.0	175.0	43.0	430.0	605.0
M30	225.0	33.0	255.0	160.0	45.0	450.0	610.0
M33	225.0	38.0	255.0	160.0	48.5	460.0	620.0
M36	255.0	44.0	295.0	180.0	55.0	510.0	690.0
M39	270.0	40.0	330.0	205.0	62.0	540.0	745.0
M42	320.0	48.0	330.0	200.0	63.0	640.0	840.0
M45	330.0	58.0	355.0	200.0	80.0	660.0	860.0
M48	360.0	58.0	355.0	195.0	80.0	720.0	915.0
M52	365.0	62.0	355.0	195.0	80.0	730.0	925.0
M56	370.0	64.0	355.0	195.0	80.0	740.0	935.0

(Important note: Measures and weights without engagement. We reserve the right to change technical details.)

Stuut Lifting & Lashing - SLL Handelsvertretung e. K.
sales@marine-lashing.com
+49 5228 9628290

Version: 2023-02-03 Y
© Copyright Stuut Lifting & Lashing. All rights reserved.

Turnbuckles

DIN 1480 turnbuckle, eye - eye

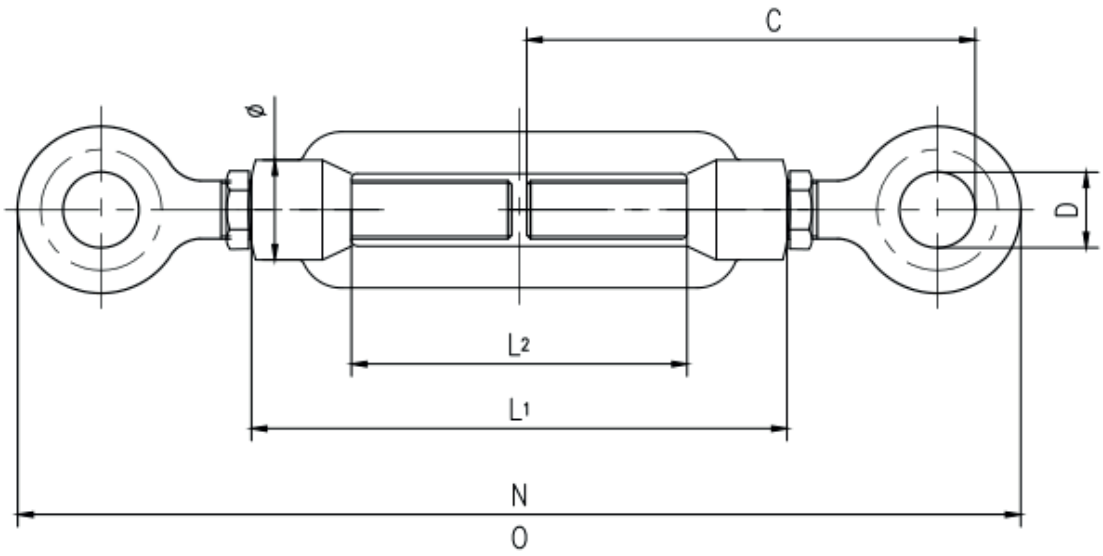

- Material : body - steel Q235 (steel grade equivalent to S235JR)
- Finish : electro galvanized
- Standard : DIN1480
- Markings : body - L, size, CE

Size	Dimensions (mm)						
	C	D	L1	L2	ϕ	N (min.)	O (max.)
M12	117.0	15.5	125.0	80.0	21.0	234.0	314.0
M14	122.0	18.0	140.0	90.0	25.0	244.0	334.0
M16	138.0	20.0	170.0	110.0	27.0	276.0	384.0
M20	170.0	22.0	200.0	130.0	34.0	340.0	470.0
M22	185.0	26.0	220.0	145.0	36.0	370.0	515.0
M24	205.0	27.0	255.0	170.0	39.0	410.0	580.0
M27	210.0	30.0	255.0	175.0	43.0	430.0	605.0
M30	225.0	32.0	255.0	160.0	45.0	450.0	610.0
M33	225.0	38.0	255.0	160.0	48.5	460.0	620.0
M36	255.0	43.0	295.0	180.0	55.0	510.0	690.0
M39	270.0	44.0	330.0	205.0	62.0	540.0	745.0
M42	320.0	48.0	330.0	200.0	63.0	640.0	840.0
M45	330.0	58.0	355.0	200.0	80.0	660.0	860.0
M48	360.0	58.0	355.0	195.0	80.0	720.0	915.0
M52	365.0	59.0	355.0	195.0	80.0	730.0	925.0
M56	370.0	60.0	355.0	195.0	80.0	740.0	935.0

(Important note: Measures and weights without engagement. We reserve the right to change technical details.)

Stuut Lifting & Lashing - SLL Handelsvertretung e. K.
sales@marine-lashing.com
+49 5228 9628290

Version: 2023-02-03 Y
© Copyright Stuut Lifting & Lashing. All rights reserved.

Turnbuckles

DIN 1480 turnbuckle, hook - eye

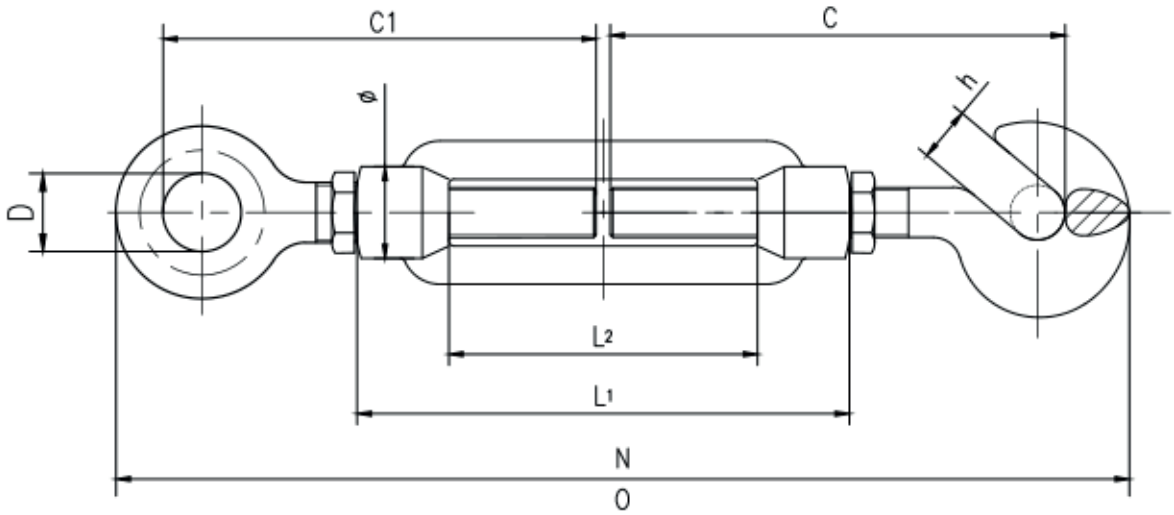

- Material : body - steel Q235 (steel grade equivalent to S235JR)
- Finish : electro galvanized
- Standard : DIN1480
- Markings : body - L, size, CE

Size	Dimensions (mm)								
	C	C1	D	h	L1	L2	ϕ	N (min.)	O (max.)
M12	117.0	117.0	15.5	15.5	125.0	80.0	21.0	234.0	314.0
M14	122.0	122.0	18.0	18.5	140.0	90.0	25.0	244.0	334.0
M16	138.0	138.0	20.0	19.0	170.0	110.0	27.0	276.0	384.0
M20	170.0	170.0	22.0	20.5	200.0	130.0	34.0	340.0	470.0
M22	185.0	185.0	26.0	26.0	220.0	145.0	36.0	370.0	515.0
M24	205.0	205.0	27.0	26.0	255.0	170.0	39.0	410.0	580.0
M27	210.0	220.0	30.0	30.0	255.0	175.0	43.0	430.0	605.0
M30	225.0	225.0	32.0	33.0	255.0	160.0	45.0	450.0	610.0
M33	260.0	255.0	38.0	38.0	255.0	160.0	48.5	460.0	620.0
M36	255.0	255.0	43.0	44.0	295.0	180.0	55.0	510.0	690.0
M39	280.0	275.0	44.0	40.0	330.0	205.0	62.0	540.0	745.0
M42	320.0	320.0	48.0	48.0	330.0	200.0	63.0	640.0	840.0
M45	330.0	330.0	58.0	58.0	355.0	200.0	80.0	660.0	860.0
M48	360.0	360.0	58.0	58.0	355.0	195.0	80.0	720.0	915.0
M52	365.0	365.0	59.0	62.0	355.0	195.0	80.0	730.0	925.0
M56	370.0	370.0	60.0	64.0	355.0	195.0	80.0	740.0	935.0

(Important note: Measures and weights without engagement. We reserve the right to change technical details.)

Stuut Lifting & Lashing - SLL Handelsvertretung e. K.
sales@marine-lashing.com
+49 5228 9628290

Version: 2023-02-03 Y
© Copyright Stuut Lifting & Lashing. All rights reserved.

Turnbuckles

DIN 1480 turnbuckle, jaw - jaw

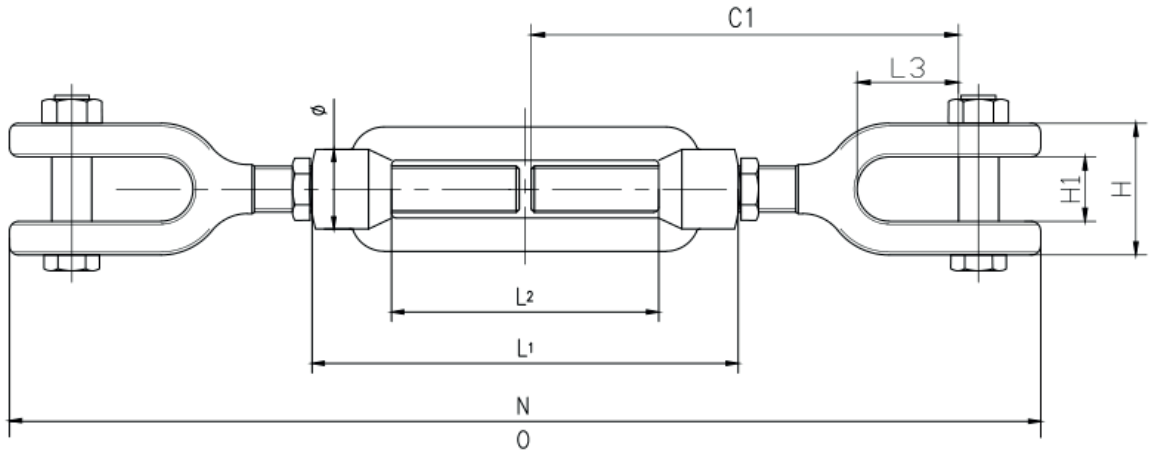

- Material : body - steel Q235 (steel grade equivalent to S235JR)
- Finish : electro galvanized
- Standard : DIN1480
- Markings : body - L, size, CE / jaw - WLL, size, CE

Size	Dimensions (mm)								
	C1	H	H1	L1	L2	L3	ϕ	N (min.)	O (max.)
M12	112.0	33.0	16.5	125.0	80.0	27.0	21.0	252.0	372.0
M14	125.0	41.0	19.0	140.0	90.0	35.0	25.0	276.0	410.0
M16	160.0	41.0	20.0	170.0	110.0	36.0	27.0	350.0	520.0
M20	190.0	50.0	23.0	200.0	130.0	38.0	34.0	430.0	630.0
M22	200.0	54.0	23.5	220.0	145.0	39.0	36.0	460.0	680.0
M24	225.0	57.0	31.0	255.0	170.0	44.5	39.0	500.0	720.0
M27	225.0	63.0	33.0	255.0	175.0	51.0	43.0	500.0	720.0
M30	230.0	70.0	34.0	255.0	160.0	56.0	45.0	520.0	750.0
M33	230.0	75.0	36.0	255.0	160.0	59.0	48.5	530.0	760.0
M36	290.0	81.0	40.0	295.0	180.0	65.0	55.0	660.0	955.0
M39	300.0	88.0	43.0	330.0	205.0	65.0	62.0	700.0	1,030.0
M42	310.0	100.0	49.0	330.0	200.0	84.0	63.0	740.0	1,070.0
M45	350.0	105.0	51.0	355.0	200.0	85.0	80.0	830.0	1,1150.0
M48	360.0	118.0	55.0	355.0	195.0	98.0	80.0	870.0	1,225.0
M52	385.0	120.0	56.0	355.0	195.0	98.0	80.0	916.0	1,260.0

(Important note: Measures and weights without engagement. We reserve the right to change technical details.)

Stuut Lifting & Lashing - SLL Handelsvertretung e. K.
sales@marine-lashing.com
+49 5228 9628290

Version: 2023-02-03 Y
© Copyright Stuut Lifting & Lashing. All rights reserved.

Turnbuckles

Open turnbuckle, jaw - jaw

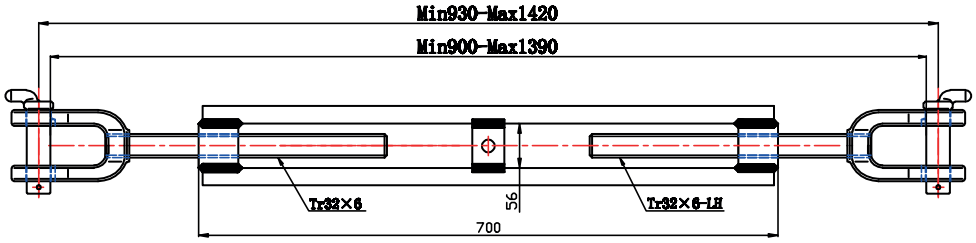

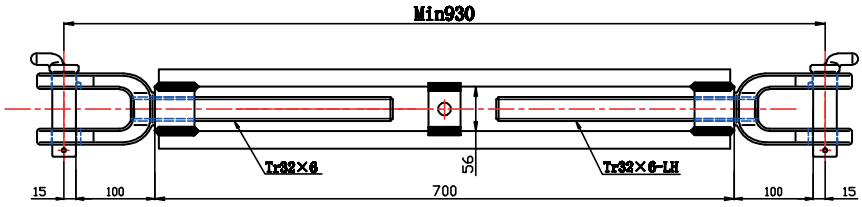

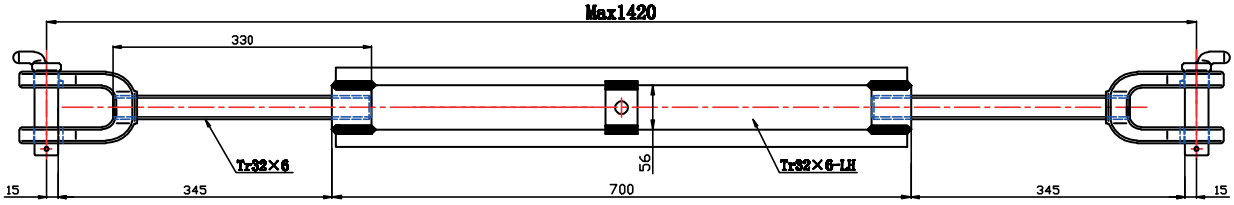

- Material : steel
- Finish : hot dip galvanized

	Save Working Load SWL	Proof Load PL	Breaking Load BL	Weight kg
Tension (kN)	250	313	500	15

(Important note: Measures and weights without engagement. We reserve the right to change technical details.)

Stuut Lifting & Lashing - SLL Handelsvertretung e. K.
sales@marine-lashing.com
+49 5228 9628290

Version: 2023-02-23 U
© Copyright Stuut Lifting & Lashing. All rights reserved.

Wire ropes

Wire rope 6x19+FC

- Finish : galvanized or ungalvanized slightly oiled
- Packing : coils or one way reels

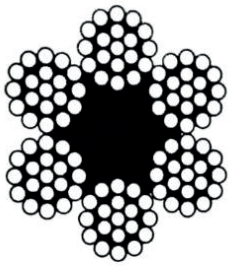

6×19+FC

Nominal Dia	Approx. weight	Nominal Tensile Strength of rope (MPa)				
D	kg / 100 m	1570	1670	1770	1870	1960
(mm)		Minimum Breaking Load of rope (kN)				
3	3.11	4.34	4.61	4.89	5.17	5.41
4	5.54	7.71	8.2	8.69	9.19	9.62
5	8.65	12	12.8	13.6	14.4	15
6	12.46	17.4	18.5	19.6	20.7	21.6
7	16.95	23.6	25.1	26.6	28.1	29.4
8	22.14	30.8	32.8	34.8	36.7	38.5
9	28.03	39	41.5	44	46.5	48.7
10	34.60	48.2	51.3	54.3	57.4	60
11	41.87	58.3	62	65.8	69.5	72.8
12	49.82	69.4	73.8	78.2	82.7	86.6
13	58.47	81.5	86.6	91.8	97	101
14	67.82	94.5	100	107	113	118
16	88.58	123	131	139	147	154
18	112.10	156	166	176	186	195
20	138.40	193	205	217	230	240
22	167.46	233	248	263	278	291
24	199.30	278	295	313	331	346
26	233.90	326	347	367	388	406
28	271.26	378	402	426	450	471
30	311.40	434	461	489	517	541
32	354.30	494	525	556	588	616
34	399.98	557	593	628	664	695
36	448.42	625	664	704	744	780
38	499.62	696	740	785	829	868
40	553.60	771	820	869	919	962
42	610.34	850	904	959	1010	1061
46	732.14	1020	1080	1150	1210	1273
48	797.18	1110	1180	1250	1320	1386
50	865.00	1200	1280	1360	1440	1504
52	935.58	1300	1390	1470	1550	1627
54	1008.94	1410	1500	1580	1670	1754
56	1085.06	1510	1610	1700	1800	1887

(Important note: Measures and weights without engagement. We reserve the right to change technical details.)

Stuut Lifting & Lashing - SLL Handelsvertretung e. K.
sales@marine-lashing.com
+49 5228 9628290

Version: 2023-01-02 Y
© Copyright Stuut Lifting & Lashing. All rights reserved.

Wire ropes

Wire rope 6x24+7FC

- Finish : galvanized or ungalvanized slightly oiled
- Packing : coils or one way reels

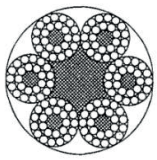

6x24+7FC

Nominal Dia	Approx. weight	Nominal Tensile Strength of rope (MPa)		
D	kg / 100 m	1570	1670	1770
(mm)		Minimum Breaking Load of rope (kN)		
5	7.95	11	11.7	12.4
8	20.35	28.1	29.9	31.7
9	25.76	35.6	37.9	40.1
10	31.80	44	46.8	49.6
11	38.48	53.2	56.6	60
12	45.79	63.3	67.3	71.4
13	53.74	74.3	79	83.8
14	62.33	86.2	91.6	97.1
16	81.41	113	120	127
18	103.03	142	152	161
20	127.20	176	187	198
18	153.91	213	226	240
20	183.17	253	269	285
22	214.97	297	316	335
24	249.31	345	367	389
26	286.20	396	421	446
28	325.63	450	479	507
30	367.61	508	541	573
32	412.13	570	606	642
34	459.19	635	675	716
36	508.80	703	748	793
38	560.95	775	825	874
40	615.65	851	905	959
42	672.89	930	989	1050
44	732.67	1010	1080	1140
46	795.00	1100	1170	1240

(Important note: Measures and weights without engagement. We reserve the right to change technical details.)

Stuut Lifting & Lashing - SLL Handelsvertretung e. K.
sales@marine-lashing.com
+49 5228 9628290

© Copyright Stuut Lifting & Lashing. All rights reserved.

Wire ropes

Wire rope 6x37+FC

- Finish : galvanized or ungalvanized slightly oiled
- Packing : coils or one way reels

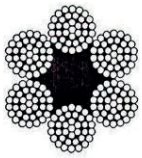

6 × 37+FC

Nominal Dia	Approx. weight	Nominal Tensile Strength of rope (MPa)				
D	kg / 100 m	1570	1670	1770	1870	1960
(mm)		Minimum Breaking Load of rope (kN)				
5	8.65	11.6	12.3	13.1	13.8	14.4
6	12.46	16.7	17.7	18.8	19.9	20.8
7	16.95	22.7	24.1	25.6	27	28.3
8	22.14	29.6	31.5	33.4	35.3	37
9	28.03	37.5	39.9	42.3	44.7	46.8
10	34.60	46.3	49.3	52.2	55.2	57.8
11	41.87	56	59.6	63.2	66.7	69.9
12	49.82	66.7	70.9	75.2	79.4	83.2
13	58.47	78.3	83.3	88.2	93.2	97.7
14	67.82	90.8	96.6	102	108	113
16	88.58	119	126	134	141	148
18	112.10	150	160	169	179	187
20	138.40	185	197	209	221	231
22	167.46	224	238	253	267	279
24	199.30	267	284	301	318	333
26	233.90	313	333	353	373	390
28	271.26	363	386	409	432	453
30	311.40	417	443	470	496	520
32	354.30	474	504	535	565	592
34	399.98	535	570	604	638	668
36	448.42	600	638	677	715	749
38	499.62	669	711	754	797	834
40	553.60	741	788	835	883	925
42	610.34	817	869	921	973	1020
44	669.86	897	954	1010	1070	1119
46	732.14	980	1040	1100	1170	1223
48	797.18	1070	1140	1200	1270	1332
50	865.00	1160	1230	1310	1380	1445
52	935.58	1250	1330	1410	1490	1563
54	1008.94	1350	1440	1520	1610	1686
56	1085.06	1450	1540	1640	1730	1813
58	1163.94	1560	1660	1760	1860	1945
60	1245.60	1670	1770	1880	1990	2081
62	1330.02	1780	1890	2010	2120	2222
64	1417.22	1900	2020	2140	2260	2368
66	1507.18	2020	2150	2270	2400	2518
68	1599.90	2140	2280	2410	2550	2673
70	1695.40	2270	2410	2560	2700	2833
72	1793.66	2400	2550	2710	2860	2997
74	1894.70	2540	2700	2860	3020	3166
76	1998.50	2680	2850	3020	3190	3339
78	2105.06	2820	3000	3180	3360	3517
80	2214.40	2960	3150	3340	3530	3700

(Important note: Measures and weights without engagement. We reserve the right to change technical details.)

Stuut Lifting & Lashing - SLL Handelsvertretung e. K.
sales@marine-lashing.com
+49 5228 9628290

Version: 2023-01-02 Y
© Copyright Stuut Lifting & Lashing. All rights reserved.

Wire rope clips

Wire rope clips DIN741

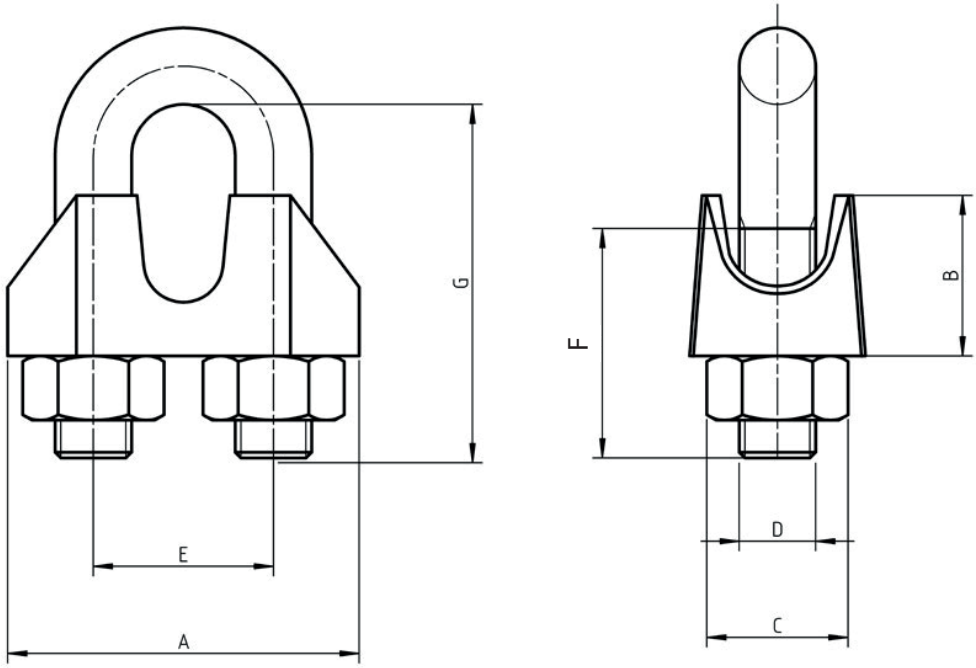

- Material : steel
- Surface : normally electro-galvanized
- Packing : as per customer request

Size (mm)	D	E	C	F	B	A	G	100 / WT (kg)
3	4	9	10	12	10	21	16	1.4
5	5	11	11	13	10	23	19	1.5
6.5	5	13	12	15	11	26	23	2.1
8	6	16	14	19	15	30	28	4.1
10	8	19	18	22	17	34	34	6.8
11	8	20	19	22	18	36	36	7.2
13	10	24	23	30	21	42	45	13
14	10	25	23	30	22	44	47	13.5
16	12	29	26	33	26	50	51	21
19	12	32	29	38	30	54	63	28
22	14	37	33	44	34	61	71	40
26	14	41	35	45	37	65	81	44
30	16	48	37	50	43	74	94	66
34	16	52	42	55	50	80	104	85
40	16	58	45	60	55	88	124	104

(Important note: Measures and weights without engagement. We reserve the right to change technical details.)

Stuut Lifting & Lashing - SLL Handelsvertretung e. K.
sales@marine-lashing.com
+49 5228 9628290

Version: 2023-01-03 Y
© Copyright Stuut Lifting & Lashing. All rights reserved.

Bins

Bin-01A, 1080 x 1080 x 680 mm

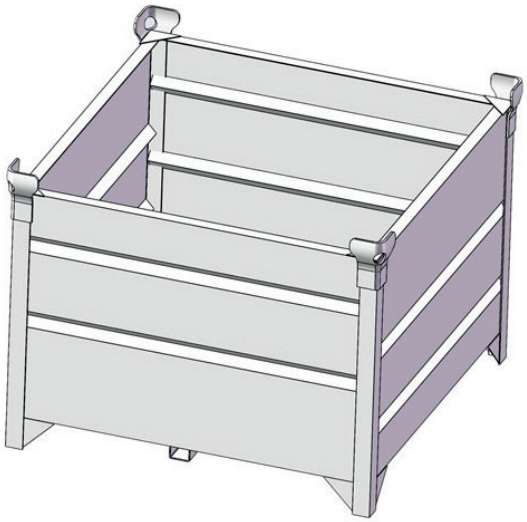

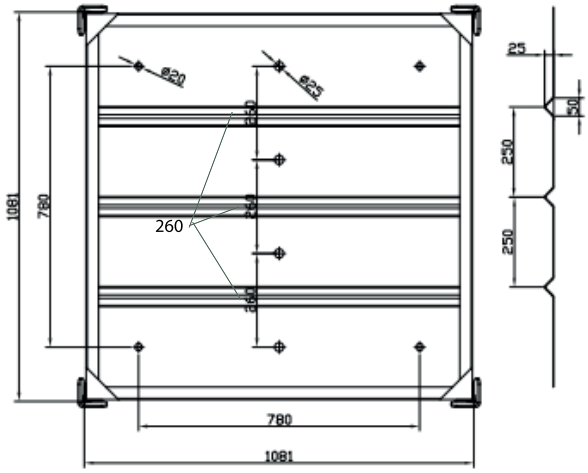

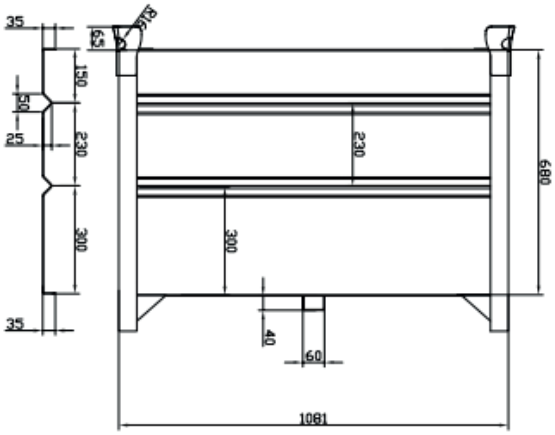

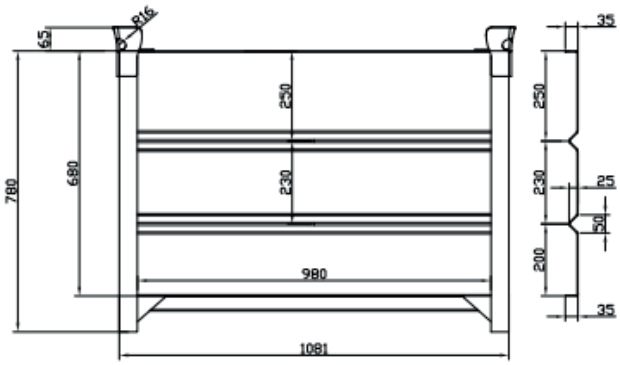

- Weight : 92 kg
- Material : Q235B
- Finish : hot dip galvanized

(Important note: Measures and weights without engagement. We reserve the right to change technical details.)

Stuut Lifting & Lashing - SLL Handelsvertretung e. K.
sales@marine-lashing.com
+49 5228 9628290

Version: 2024-03-21 Y
© Copyright Stuut Lifting & Lashing. All rights reserved.

Bins

Bin-01B, 1080 x 1080 x 580 mm

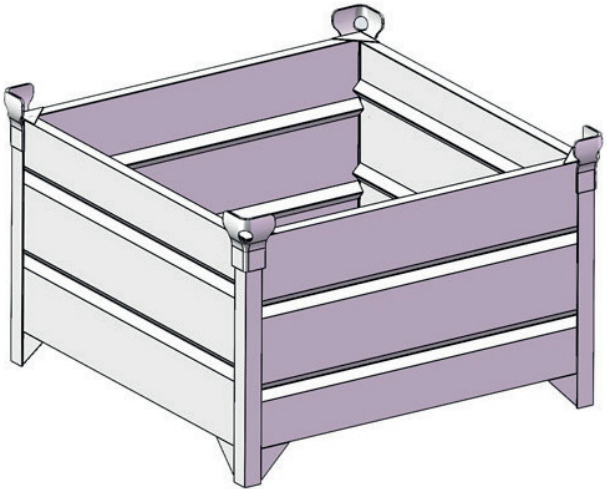

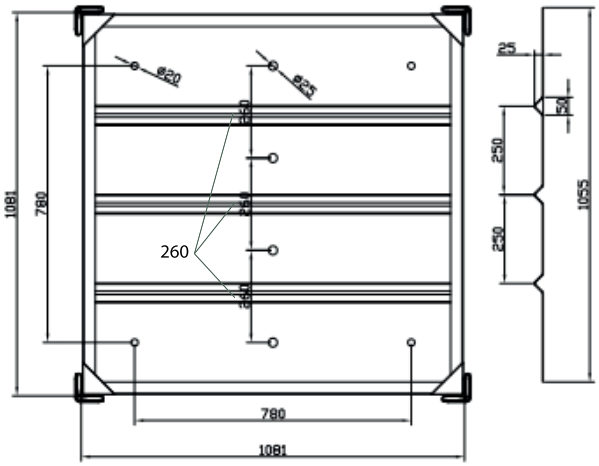

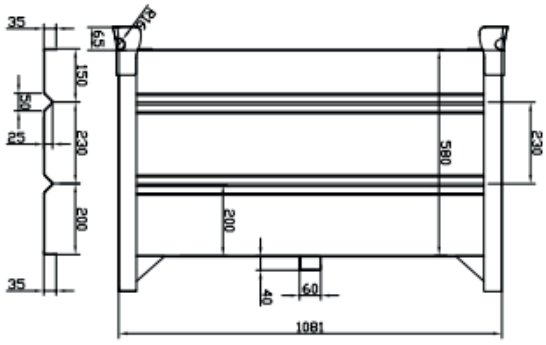

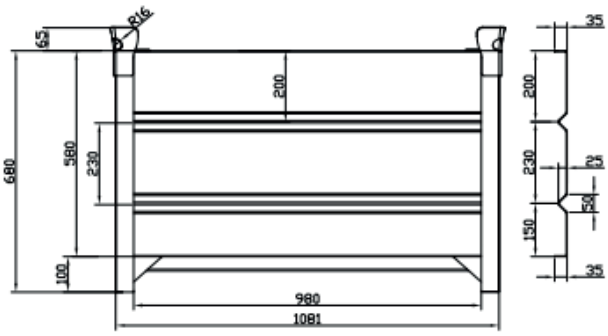

- Weight : 88 kg
- Material : Q235B
- Finish : hot dip galvanized

(Important note: Measures and weights without engagement. We reserve the right to change technical details.)

Stuut Lifting & Lashing - SLL Handelsvertretung e. K.
sales@marine-lashing.com
+49 5228 9628290

Version: 2024-03-21 Y

© Copyright Stuut Lifting & Lashing. All rights reserved.

Bins

Bin-02, 1096 x 786 x 500 mm

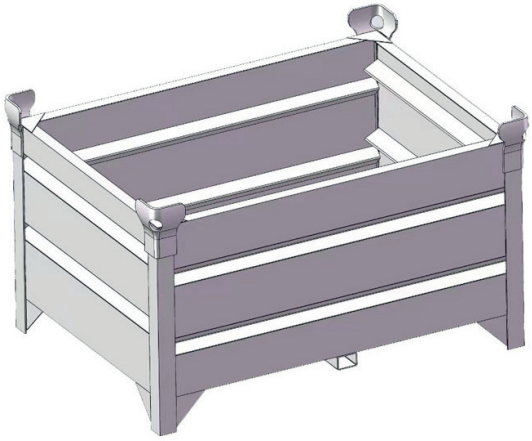

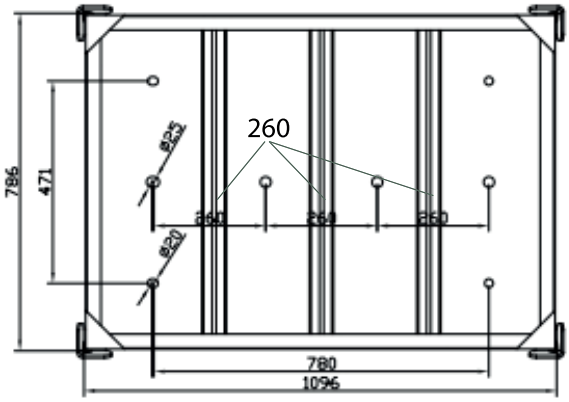

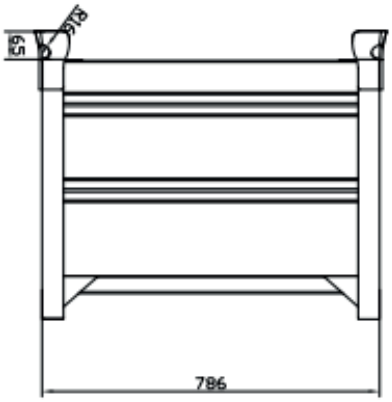

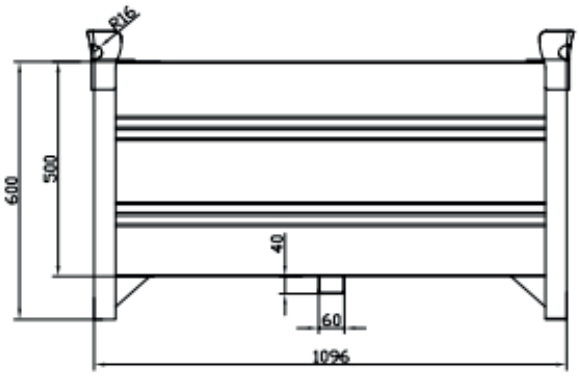

- Weight : 66 kg
- Material : Q235B
- Finish : hot dip galvanized

(Important note: Measures and weights without engagement. We reserve the right to change technical details.)

Stuut Lifting & Lashing - SLL Handelsvertretung e. K.
sales@marine-lashing.com
+49 5228 9628290

Version: 2024-03-26 Y
© Copyright Stuut Lifting & Lashing. All rights reserved.

Bins

Bin-03, 1360 x 1030 x 860 mm

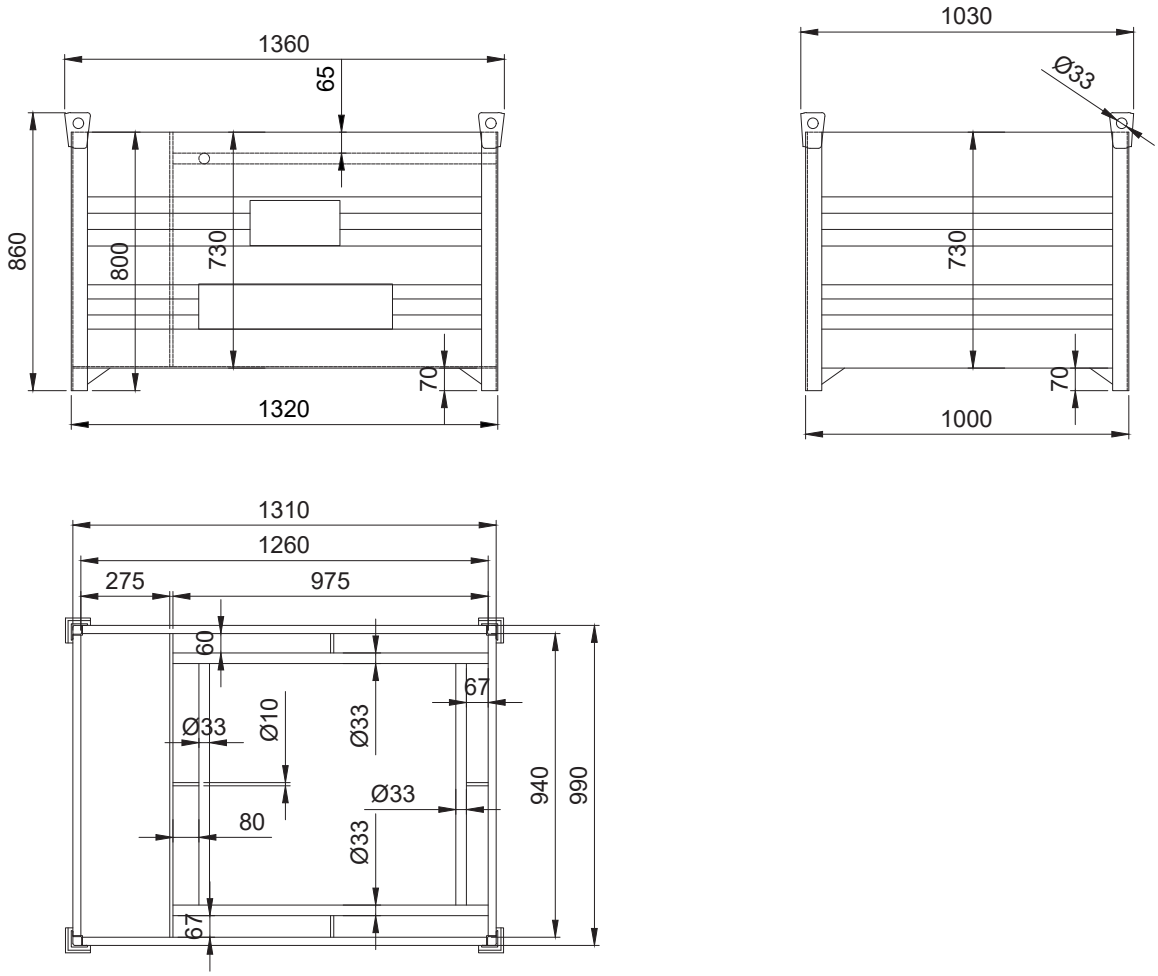

- SWL : 2 t
- Weight : 135 kg
- Material : Q235B
- Finish : hot dip galvanized

(Important note: Measures and weights without engagement. We reserve the right to change technical details.)

Stuut Lifting & Lashing - SLL Handelsvertretung e. K.
sales@marine-lashing.com
+49 5228 9628290

Version: 2024-03-21 Y
© Copyright Stuut Lifting & Lashing. All rights reserved.

Bins

Bin-04, 1140 x 1300 x 800 mm

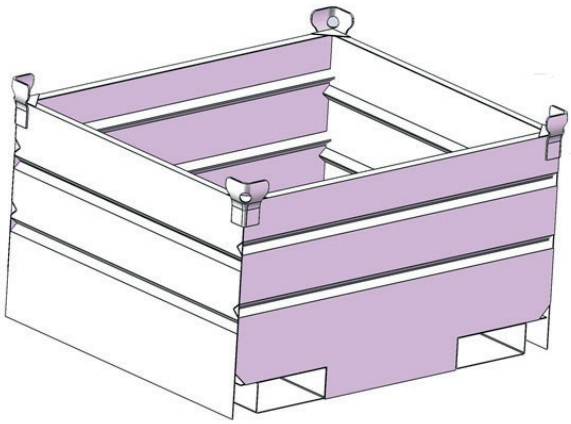

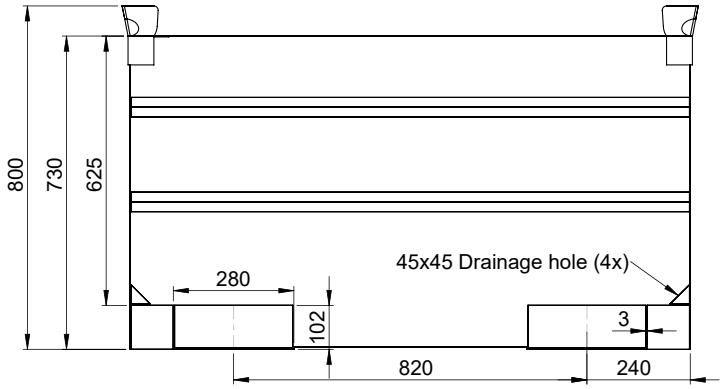

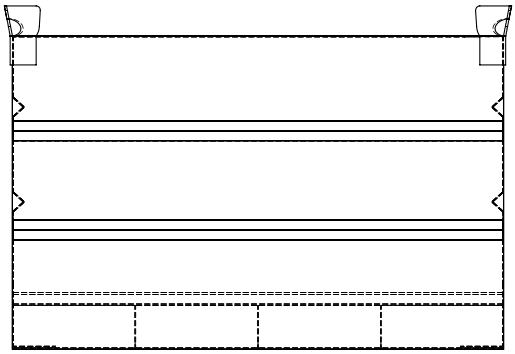

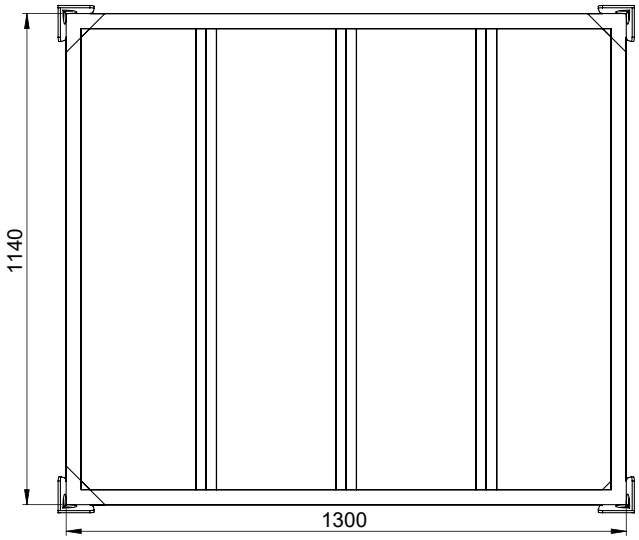

- SWL : 2 t
- Weight : 141 kg
- Material : Q235B
- Finish : hot dip galvanized

(Important note: Measures and weights without engagement. We reserve the right to change technical details.)

Stuut Lifting & Lashing - SLL Handelsvertretung e. K.
sales@marine-lashing.com
+49 5228 9628290

Version: 2024-03-21 Y
© Copyright Stuut Lifting & Lashing. All rights reserved.

Bins

Bin-05, 1320 x 1090 x 810 mm

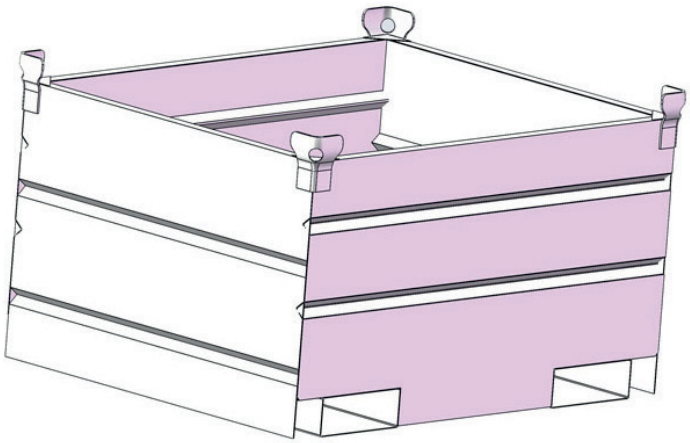

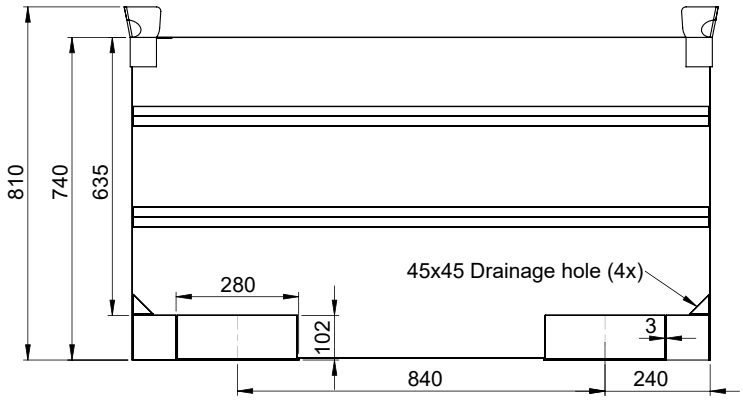

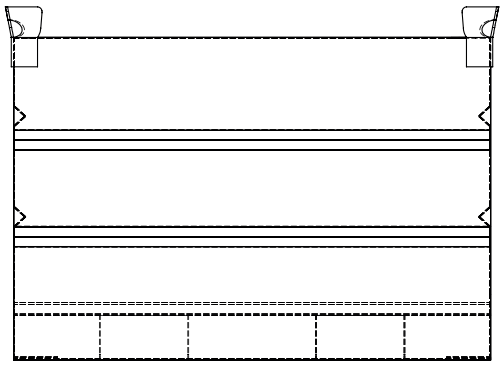

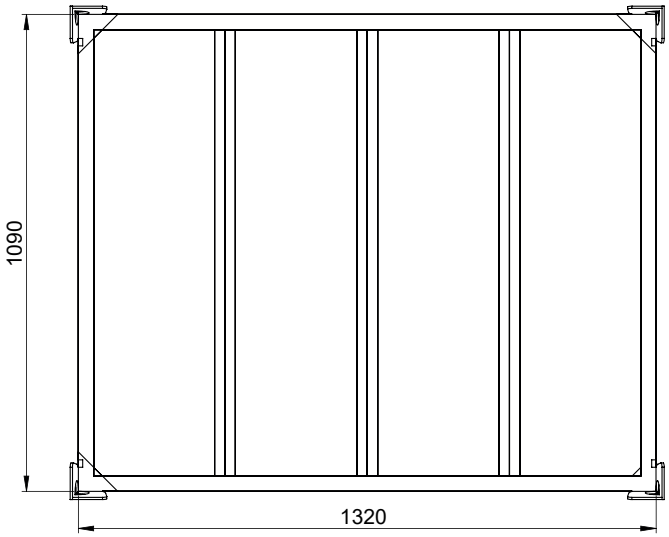

- SWL : 2 t
- Weight : 104 kg
- Material : Q235B
- Finish : hot dip galvanized

(Important note: Measures and weights without engagement. We reserve the right to change technical details.)

Stuut Lifting & Lashing - SLL Handelsvertretung e. K.
sales@marine-lashing.com
+49 5228 9628290

Version: 2024-03-21 Y
© Copyright Stuut Lifting & Lashing. All rights reserved.

Bins

Bin-06, 1090 x 778 x 665 mm

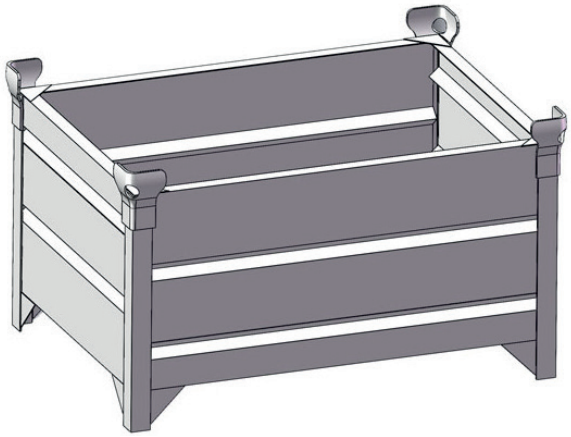

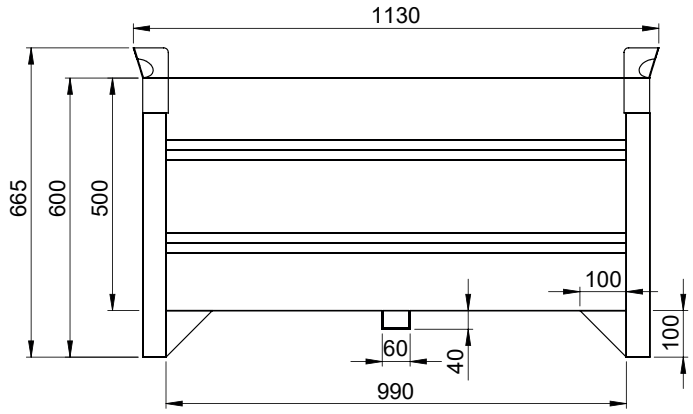

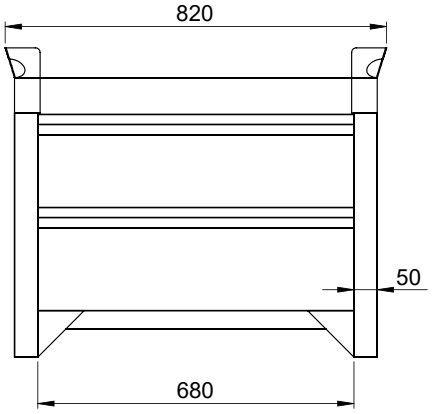

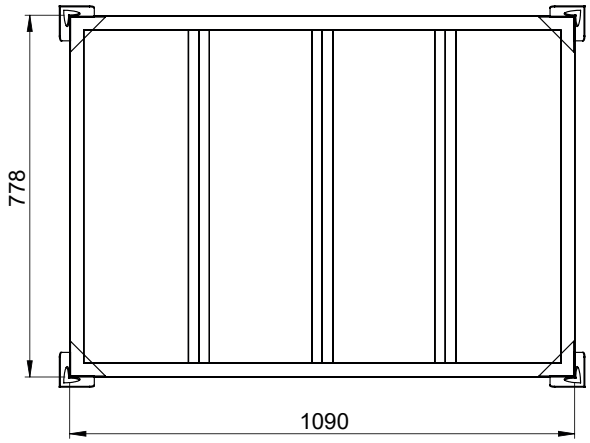

- SWL : 1.5 t
- Weight : 58 kg
- Material : Q235B
- Finish : hot dip galvanized

(Important note: Measures and weights without engagement. We reserve the right to change technical details.)

Stuut Lifting & Lashing - SLL Handelsvertretung e. K.
sales@marine-lashing.com
+49 5228 9628290

Version: 2024-03-21 Y
© Copyright Stuut Lifting & Lashing. All rights reserved.

Bins

Bin-07, 1075 x 1075 x 845 mm

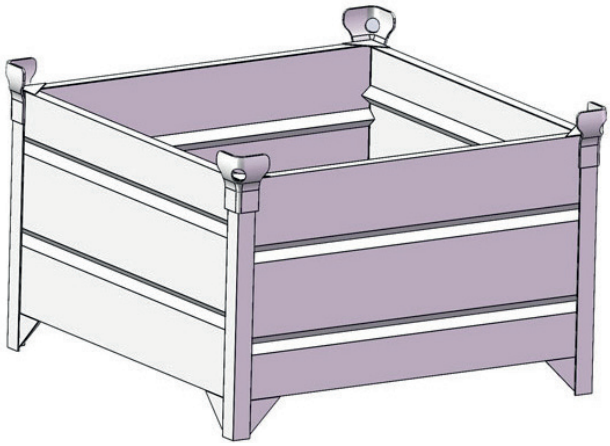

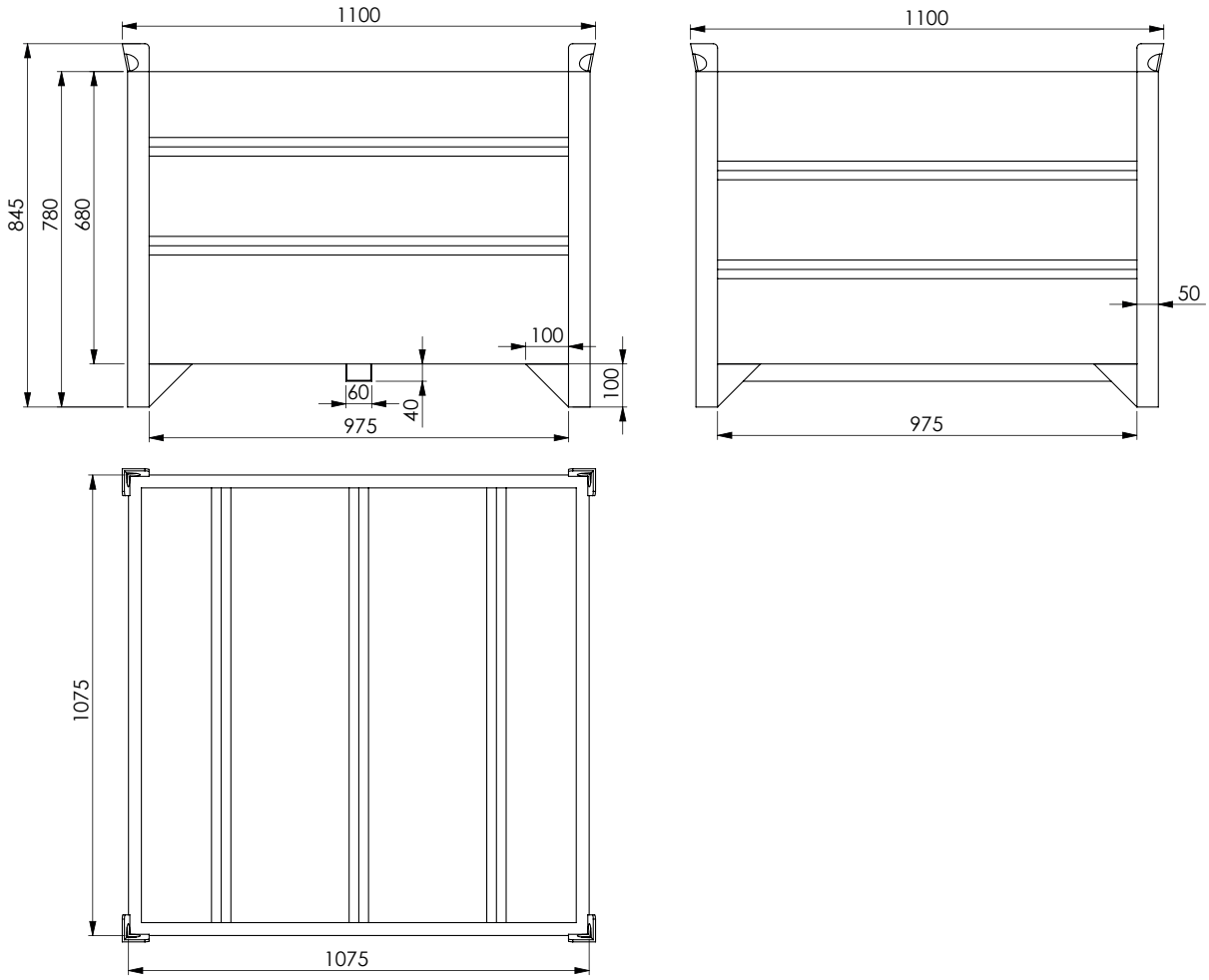

- SWL : 2 t
- Weight : 87 kg
- Material : Q235B
- Finish : hot dip galvanized

(Important note: Measures and weights without engagement. We reserve the right to change technical details.)

Stuut Lifting & Lashing - SLL Handelsvertretung e. K.
sales@marine-lashing.com
+49 5228 9628290

Version: 2024-03-21 Y
© Copyright Stuut Lifting & Lashing. All rights reserved.

Buckles for one way webbing

Plate buckle S35P - 30 / 32 mm - 1,700 daN

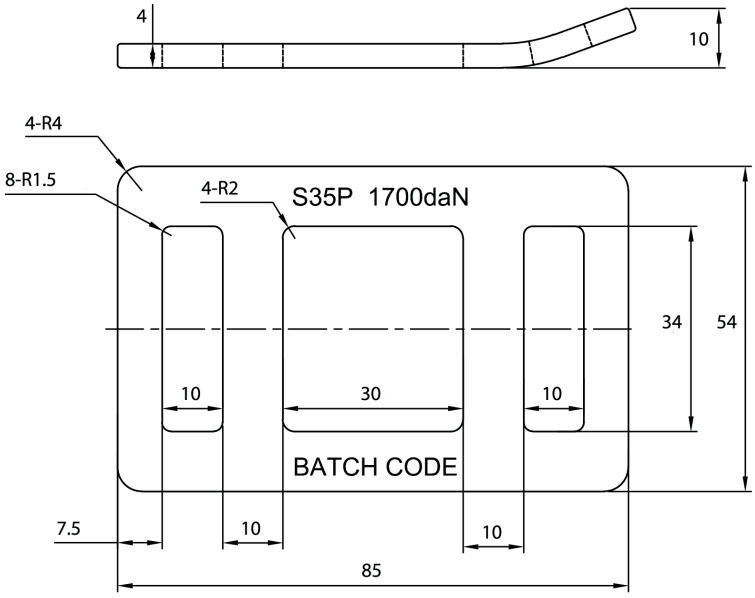

(Dimensions in mm.)

Art. No.	S35P
MBL	1,700 daN
For webbing	30 & 32 mm
Material	C45
Finish	electro galvanized (Cr6+ free)
Markings	as per customer request
Weight	85 g / pc
Packing	125 pcs / carton (48 cts / pallet)

(Important note: Measures and weights without engagement. We reserve the right to change technical details.)

Stuut Lifting & Lashing - SLL Handelsvertretung e. K.
sales@marine-lashing.com
+49 5228 9628290

Version: 2024-02-14 Y
© Copyright Stuut Lifting & Lashing. All rights reserved.

Buckles for one way webbing

Forged buckle B3530A - 30 / 32 mm - 3,000 daN

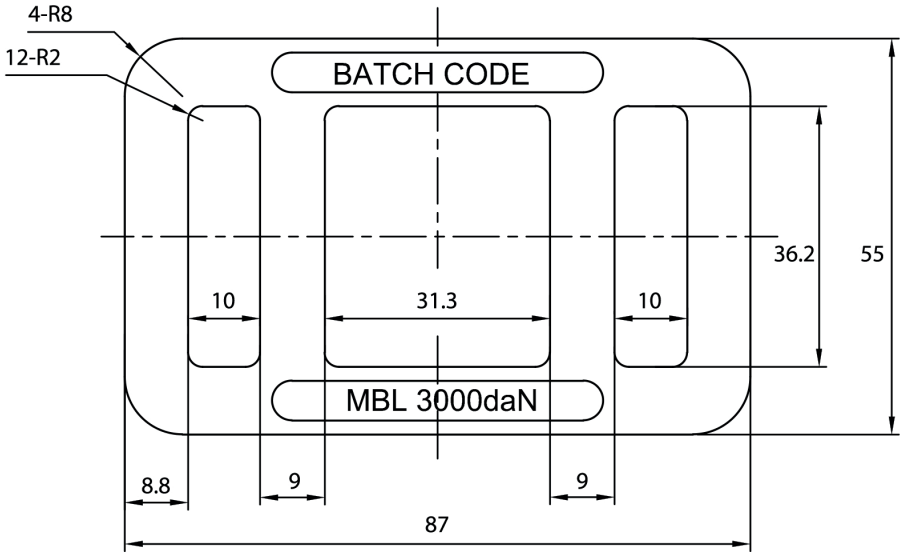

(Dimensions in mm.)

Art. No.	B3530A
MBL	3,000 daN
For webbing	30 & 32 mm
Material	C45
Finish	electro galvanized (Cr6+ free)
Markings	as per customer request
Weight	95 g / pc
Packing	80 pcs / carton (48 cts / pallet)

(Important note: Measures and weights without engagement. We reserve the right to change technical details.)

Stuut Lifting & Lashing - SLL Handelsvertretung e. K.
sales@marine-lashing.com
+49 5228 9628290

Version: 2024-02-16 Y
© Copyright Stuut Lifting & Lashing. All rights reserved.

Buckles for one way webbing

Forged bent buckle B3530B - 30 / 32 mm - 3,000 daN

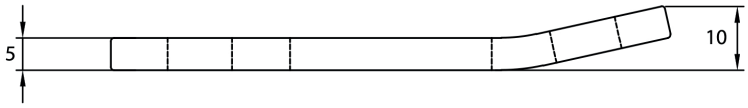

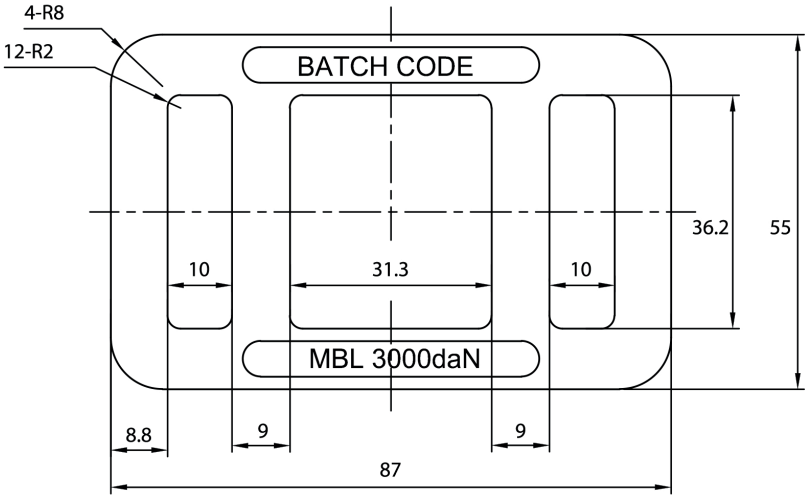

(Dimensions in mm.)

Art. No.	B3530B
MBL	3,000 daN
For webbing	30 & 32 mm
Material	C45
Finish	electro galvanized (Cr6+ free)
Markings	as per customer request
Weight	95 g / pc
Packing	80 pcs / carton (48 cts / pallet)

(Important note: Measures and weights without engagement. We reserve the right to change technical details.)

Stuut Lifting & Lashing - SLL Handelsvertretung e. K.
sales@marine-lashing.com
+49 5228 9628290

Version: 2024-02-16 Y
© Copyright Stuut Lifting & Lashing. All rights reserved.

Buckles for one way webbing

Forged buckle B3030 - 30 / 32 mm - 3,000 daN

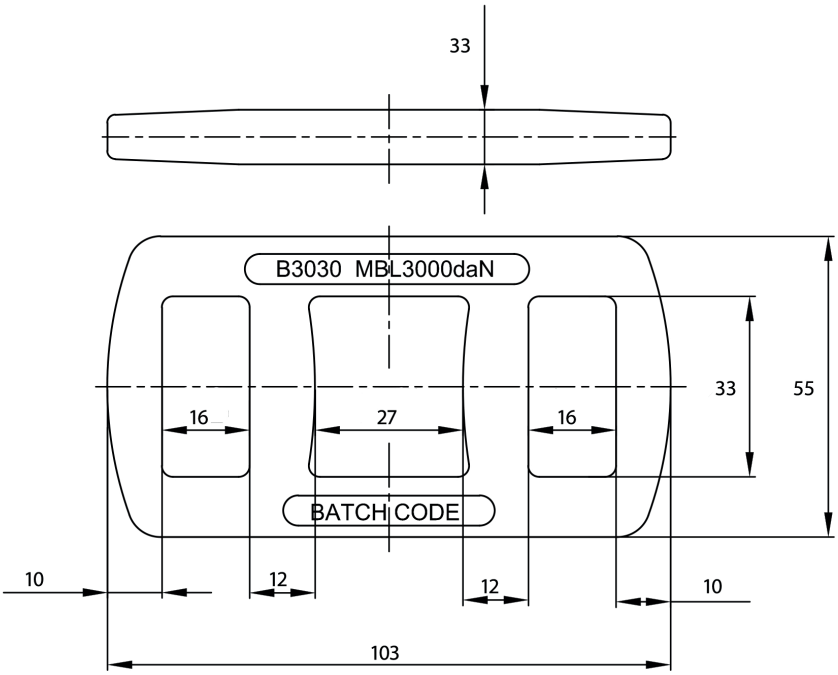

(Dimensions in mm.)

Art. No.	B3030
MBL	3,000 daN
For webbing	30 & 32 mm
Material	C45
Finish	electro galvanized (Cr6+ free)
Markings	as per customer request
Weight	215 g / pc
Packing	100 pcs / carton (48 cts / pallet)

(Important note: Measures and weights without engagement. We reserve the right to change technical details.)

Stuut Lifting & Lashing - SLL Handelsvertretung e. K.
sales@marine-lashing.com
+49 5228 9628290

Version: 2024-02-16 Y
© Copyright Stuut Lifting & Lashing. All rights reserved.

Buckles for one way webbing

Forged buckle B4050 - 38 / 40 mm - 5,000 daN

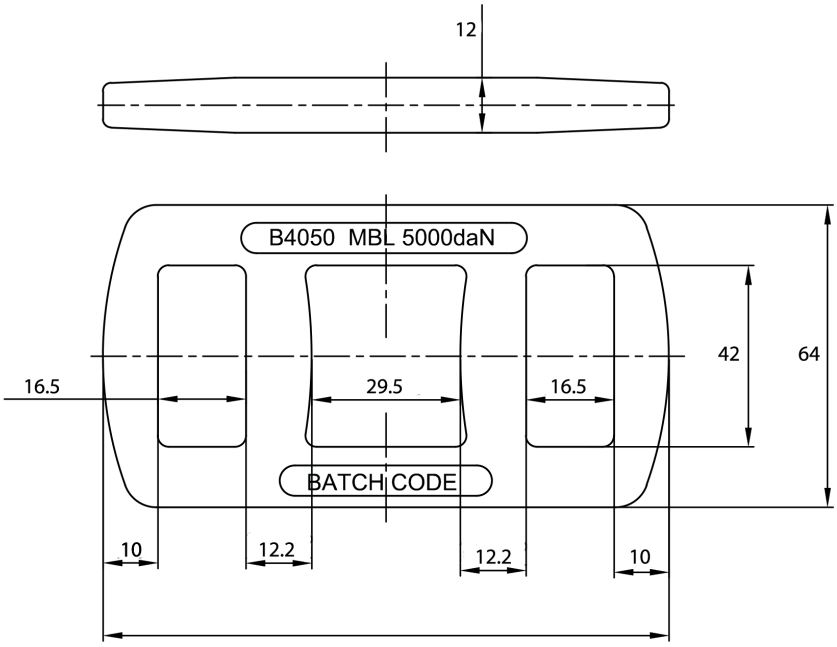

(Dimensions in mm.)

Art. No.	B4050
MBL	5,000 daN
For webbing	38 & 40 mm
Material	C45
Finish	electro galvanized (Cr6+ free)
Markings	as per customer request
Weight	290 g / pc
Packing	50 pcs / carton (48 cts / pallet)

(Important note: Measures and weights without engagement. We reserve the right to change technical details.)

Stuut Lifting & Lashing - SLL Handelsvertretung e. K.
sales@marine-lashing.com
+49 5228 9628290

Version: 2024-02-16 Y
© Copyright Stuut Lifting & Lashing. All rights reserved.

Buckles for one way webbing

Forged buckle B5050 - 50 mm - 5,000 daN

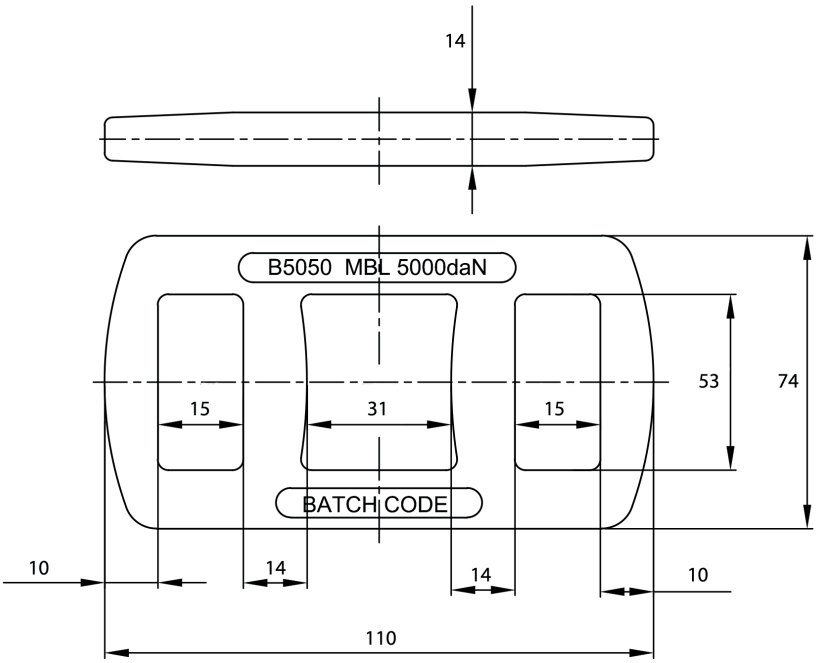

(Dimensions in mm.)

Art. No.	B5050
MBL	5,000 daN
For webbing	50 mm
Material	C45
Finish	electro galvanized (Cr6+ free)
Markings	as per customer request
Weight	390 g / pc
Packing	50 pcs / carton (48 cts / pallet)

(Important note: Measures and weights without engagement. We reserve the right to change technical details.)

Stuut Lifting & Lashing - SLL Handelsvertretung e. K.
sales@marine-lashing.com
+49 5228 9628290

Version: 2024-02-16 Y
© Copyright Stuut Lifting & Lashing. All rights reserved.

Buckles for one way webbing

Forged buckle B50100 - 50 mm - 10,000 daN

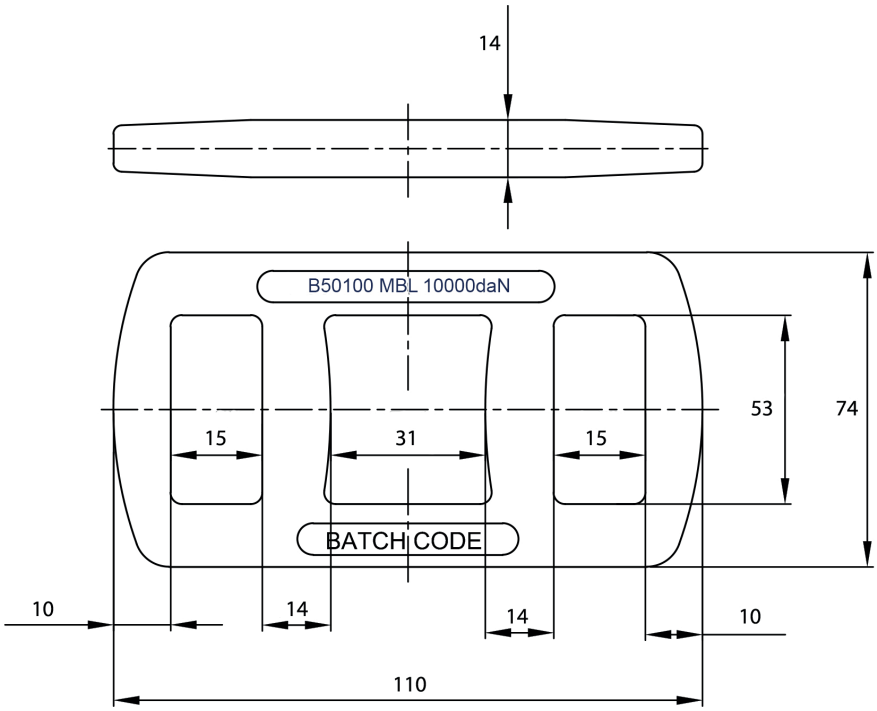

(Dimensions in mm.)

Art. No.	B50100
MBL	10,000 daN
For webbing	50 mm
Material	C45
Finish	electro galvanized (Cr6+ free)
Markings	as per customer request
Weight	390 g / pc
Packing	50 pcs / carton (48 cts / pallet)

(Important note: Measures and weights without engagement. We reserve the right to change technical details.)

Stuut Lifting & Lashing - SLL Handelsvertretung e. K.
sales@marine-lashing.com
+49 5228 9628290

Version: 2024-02-16 Y
© Copyright Stuut Lifting & Lashing. All rights reserved.

Buckles for one way webbing

Forged buckle B50100HD - 50 mm - 10.000 daN

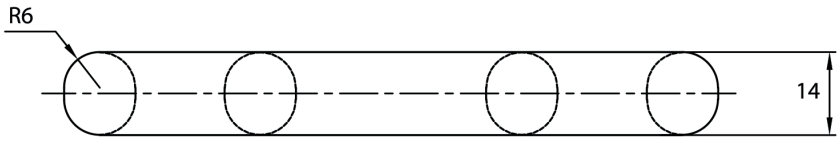

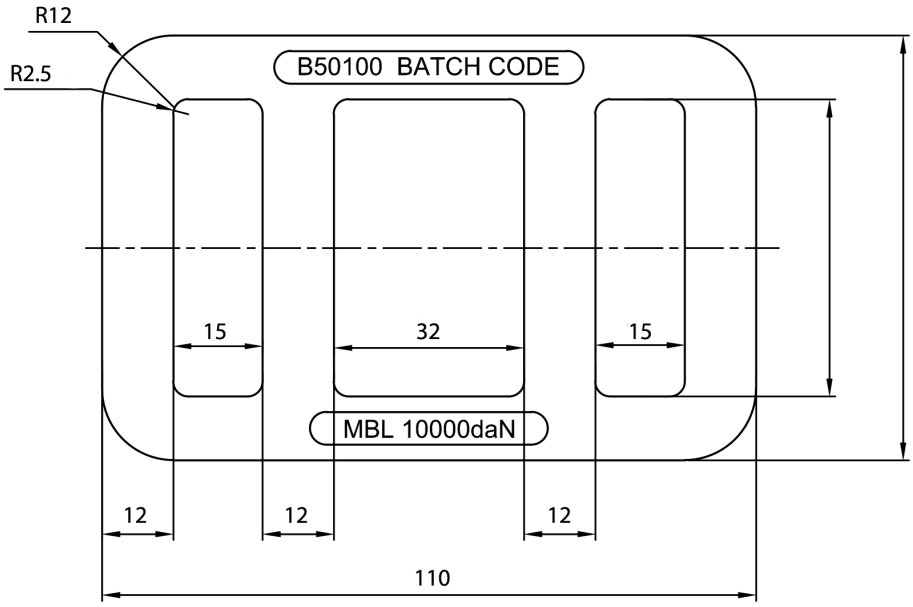

(Dimensions in mm)

- MBL : 10.000 daN
- For webbing : 50 mm
- Material : C45
- Finish : Electro galvanized (Cr6+ free)
- Markings : as per customer request
- Weight : 445 g / pc
- Packing : 40 pcs / ctn (48 cts / pallet)

(Important note: Measures and weights without engagement. We reserve the right to change technical details.)

Stuut Lifting & Lashing - SLL Handelsvertretung e. K.
sales@marine-lashing.com
+49 5228 9628290

Version: 2023-02-08 Y
© Copyright Stuut Lifting & Lashing. All rights reserved.

PE Tarpaulin

- Material : PE 100 g / m^2 & 250 g / m^2
- Standard sizes : 6 x 8 m, 8 x 10 m, 10 x 12 m, 10 x 15 m
- Standard colour : blue or green
- With reinforced sides
- With eyelets every meter

(Important note: Measures and weights without engagement. We reserve the right to change technical details.)

Stuut Lifting & Lashing - SLL Handelsvertretung e. K.
sales@marine-lashing.com
+49 5228 9628290

Version: 2024-02-01 Y
© Copyright Stuut Lifting & Lashing. All rights reserved.

PVC Tarpaulin

- Material : PVC coated polyester; 530 g/m²
- Standard sizes : 6 x 8 m, 8 x 10 m, 10 x 12 m - other sizes on request available
- Standard colour : blue
- With reinforced sides
- With eyelets every meter

(Important note: Measures and weights without engagement. We reserve the right to change technical details.)

Stuut Lifting & Lashing - SLL Handelsvertretung e. K.
sales@marine-lashing.com
+49 5228 9628290

Version: 2024-01-23 Y
© Copyright Stuut Lifting & Lashing. All rights reserved.

Welding Blanket

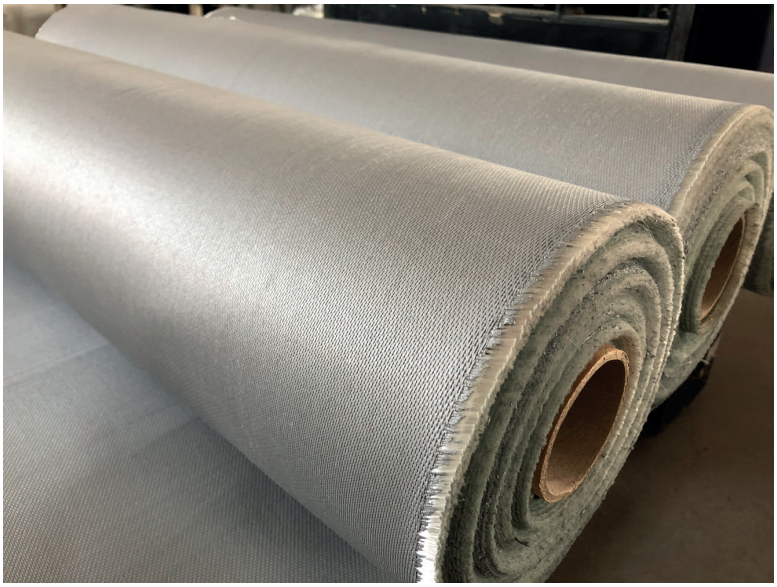

- Material : fiberglass with 2 sides PU
- Standard Delivery : rolls 25 m x 1 m
- Thickness : 0.6 ± 0.03 mm
- Weight : 720 g ± 20 (g/m^2)
- Temperature of use : continuous up to 500° C, peak up to 600° C

(Important note: Measures and weights without engagement. We reserve the right to change technical details.)

Stuut Lifting & Lashing - SLL Handelsvertretung e. K.
sales@marine-lashing.com
+49 5228 9628290

Version: 2023-08-14 Y
© Copyright Stuut Lifting & Lashing. All rights reserved.

Various

Dunnage wood

Material	Hard wood & soft wood available
Finish	On request heat treated or fumigated as per ISPM 15
Dimensions	as per customer request

(Important note: Measures and weights without engagement. We reserve the right to change technical details.)

Stuut Lifting & Lashing - SLL Handelsvertretung e. K.
sales@marine-lashing.com
+49 5228 9628290

Version: 2024-03-18 Y
© Copyright Stuut Lifting & Lashing. All rights reserved.

DEMO TEST CERTIFICATE

QingDao City Yuedasite Rigging CO.,LTD

Xiaohan Village Industry Park,Jimo,Qingdao,China
Website: www.yuedasite.com
Mobile: 0086-18653211898
TEL: 0086-532-88562777
FAX: 0086-532-88569339
Email: mary@yuedasite.com

TEST AND MATERIAL CERTIFICATE

Standard applied: XXXXX	**Supplier:** Qingdao City Yuedasite Rigging CO.,LTD	**Date:** XX.XX.XXXX
Certificate type: Works Certificate		**Delivery terms:** FOB QINGDAO
Order no.: XXXXX	**Product:** LASHING CHAIN WITH TWO C-HOOKS	
Manufacturer code: YD-LCHH-13-5.8	**Customer:** XXXX	

Item	Item no.	Cast no.	Ø-Dia	Marking	Chemical Composition				
					C%	Si%	Mn%	P%	S%
1	CHAIN	20Mn2	13	SI0303D	0,2	0,23	1,53	0,014	0,011
2	HOOK	40Cr	38	13MM,MBL20T, XXXX,SH11	0,41	0,23	0,64	0,012	0,01

LASHING CHAIN WITH HOOKS-description & Strength Characteristics

1	Material:	40Cr/20Mn2
2	Surface finish:	Chain-Dacromet;Hook-Dacromet+Red
3	Min. breaking load:	200 KN
4	Tested breaking load:	XXXX kN
5	Test date:	XX.XX.XXXX

The manufacturer confirms that the results of tests performed on the items supplied show that the above-listed parts comply with the order specifications.

Company stamp:

www.marine-lashing.com

Stuut Lifting & Lashing

Roggenkamp 29 | 32602 Vlotho | Germany

T +49 5228 9628290 sales@lifting-lashing.de
F +49 5228 9628299 www.lifting-lashing.de

SLL Handelsvertretung e.K. | Owner Alexander Stuut | VAT No. DE815371175 | Registered Amtsgericht Bad Oeynhausen - HRA 8210